Illinois Department of Transportation

Local Public Agency Formal Contract Proposal

COVER SHEET

Proposal Submitted By:

Contractor's Name

Contractor's Address | City | State | Zip Code

STATE OF ILLINOIS

Local Public Agency: Joliet Township Road District

County: Will

Section Number:

Route(s) (Street/Road Name): Sugar Creek Drive

Type of Funds:

☐ Proposal Only ☒ Proposal and Plans ☐ Proposal only, plans are separate

Submitted/Approved

For Local Public Agency:

For a County and Road District Project

Submitted/Approved

Highway Commissioner Signature & Date

Submitted/Approved

County Engineer/Superintendent of Highways Signature & Date

For a Municipal Project

Submitted/Approved/Passed

Signature & Date

Official Title

Department of Transportation

Released for bid based on limited review

Regional Engineer Signature & Date

Note: All proposal documents, including Proposal Guaranty Checks or Proposal Bid Bonds, should be stapled together to prevent loss when bids are processed.

Local Public Agency	County	Section Number	Route(s) (Street/Road Name)
Joliet Township Road District	Will		Sugar Creek Drive

NOTICE TO BIDDERS

Sealed proposals for the project described below will be received at the office of the Joliet Township Clerk (Name of Office)

175 West Jefferson Street, Joliet, IL 60432 (Address) until 10:59 A.M. (Time) on 10/29/2026 (Date).

Sealed proposals will be opened and read publicly at the office of the Joliet Township Clerk (Name of Office)

175 West Jefferson Street, Joliet, IL 60432 (Address) at 11:00 A.M. (Time) on 10/29/2026 (Date).

DESCRIPTION OF WORK

Location	Project Length
Sugar Creek Drive & Valley Parkway East	100'

Proposed Improvement

Replacing existing x-road CMP with Precast Box Culvert, Class D Patch Type IV 6", Earthwork, Seeding, and other items to complete the project.

1. Plans and proposal forms will be available in the office of

The Joliet Township Clerk
175 West Jefferson Street
Joliet, IL 60432

2. ☒ Prequalification

   If checked, the 2 apparent as read low bidders must file within 24 hours after the letting an "Affidavit of Availability" (Form BC 57) in triplicate, showing all uncompleted contracts awarded to them and all low bids pending award for Federal, State, County, Municipal and private work. One original shall be filed with the Awarding Authority and two originals with the IDOT District Office.

3. The Awarding Authority reserves the right to waive technicalities and to reject any or all proposals as provided in BLRS Special Provision for Bidding Requirements and Conditions for Contract Proposals.

4. The following BLR Forms shall be returned by the bidder to the Awarding Authority:
   a. Local Public Agency Formal Contract Proposal (BLR 12200)
   b. Schedule of Prices (BLR 12201)
   c. Proposal Bid Bond (BLR 12230) (if applicable)
   d. Apprenticeship or Training Program Certification (BLR 12325) (do not use for project with Federal funds.)
   e. Affidavit of Illinois Business Office (BLR 12326) (do not use for project with Federal funds)

5. The quantities appearing in the bid schedule are approximate and are prepared for the comparison of bids. Payment to the Contractor will be made only for the actual quantities of work performed and accepted or materials furnished according to the contract. The scheduled quantities of work to be done and materials to be furnished may be increased, decreased or omitted as hereinafter provided.

6. Submission of a bid shall be conclusive assurance and warranty the bidder has examined the plans and understands all requirements for the performance of work. The bidder will be responsible for all errors in the proposal resulting from failure or neglect to conduct an in depth examination. The Awarding Authority will, in no case, be responsible for any costs, expenses, losses or changes in anticipated profits resulting from such failure or neglect of the bidder.

7. The bidder shall take no advantage of any error or omission in the proposal and advertised contract.

8. If a special envelope is supplied by the Awarding Authority, each proposal should be submitted in that envelope furnished by the Awarding Agency and the blank spaces on the envelope shall be filled in correctly to clearly indicate its contents. When an envelope other than the special one furnished by the Awarding Authority is used, it shall be marked to clearly indicate its contents. When sent by mail, the sealed proposal shall be addressed to the Awarding Authority at the address and in care of the official in whose office the bids are to be received. All proposals shall be filed prior to the time and at the place specified in the Notice to Bidders. Proposals received after the time specified will be returned to the bidder unopened.

9. Permission will be given to a bidder to withdraw a proposal if the bidder makes the request in writing or in person before the time for opening proposals.

Local Public Agency	County	Section Number	Route(s) (Street/Road Name)
Joliet Township Road District	Will		Sugar Creek Drive

PROPOSAL

1. Proposal of _____
Contractor's Name

_____.
Contractor's Address

2. The plans for the proposed work are those prepared by Hutchison Engineering, Inc., Shorewood, IL and approved by the Department of Transportation on N/A.

3. The specifications referred to herein are those prepared by the Department of Transportation and designated as "Standard Specifications for Road and Bridge Construction" and the " Supplemental Specifications and Recurring Special Provisions" thereto, adopted and in effect on the date of invitation for bids.

4. The undersigned agrees to accept, as part of the contract, the applicable Special Provisions indicated on the "Check Sheet for Recurring Special Provisions" contained in this proposal.

5. The undersigned agrees to complete the work within 15 working days or by _____ unless additional time is granted in accordance with the specifications.

6. The successful bidder at the time of execution of the contract will be required to deposit a contract bond for the full amount of the award. When a contract bond is not required, the proposal guaranty check will be held in lieu thereof. If this proposal is accepted and the undersigned fails to execute a contract and contract bond as required, it is hereby agreed that the Bid Bond of check shall be forfeited to the Awarding Authority.

7. Each pay item should have a unit price and a total price. If no total price is shown or if there is a discrepancy between the products of the unit price multiplied by the quantity, the unit price shall govern. If a unit price is omitted, the total price will be divided by the quantity in order to establish a unit price. A bid may be declared unacceptable if neither a unit price nor a total price is shown.

8. The undersigned submits herewith the schedule of prices on BLR 12201 covering the work to be performed under this contract.

9. The undersigned further agrees that if awarded the contract for the sections contained in the combinations on BLR 12201, the work shall be in accordance with the requirements of each individual proposal for the multiple bid specified in the Schedule for Multiple Bids below.

10. A proposal guaranty in the proper amount, as specified in BLRS Special Provision for Bidding Requirements and Conditions for Contract Proposals, will be required. Bid Bonds will be allowed as a proposal guaranty. Accompanying this proposal is either a bid bond, if allowed, on Department form BLR 12230 or a proposal guaranty check, complying with the specifications, made payable to: the Joliet Township Clerk Treasurer of Joliet Township.
The amount of the check is _____ (_____).

Attach Cashier's Check or Certified Check Here

In the event that one proposal guaranty check is intended to cover two or more bid proposals, the amount must be equal to the sum of the proposal guaranties which would be required for each individual bid proposal. If the proposal guaranty check is placed in another bid proposal, state below where it may be found.

The proposal guaranty check will be found in the bid proposal for: Section Number _____ .

Local Public Agency	County	Section Number	Route(s) (Street/Road Name)
Joliet Township Road District	Will		Sugar Creek Drive

CONTRACTOR CERTIFICATIONS

The certifications hereinafter made by the bidder are each a material representation of fact upon which reliance is placed should the Department enter into the contract with the bidder.

1. **Debt Delinquency.** The bidder or contractor or subcontractor, respectively, certifies that it is not delinquent in the payment of any tax administered by the Department of Revenue unless the individual or other entity is contesting, in accordance with the procedure established by the appropriate Revenue Act, its liability for the tax or the amount of the tax. Making a false statement voids the contract and allows the Department to recover all amounts paid to the individual or entity under the contract in a civil action.

2. **Bid-Rigging or Bid Rotating**. The bidder or contractor or subcontractor, respectively, certifies that it is not barred from contracting with the Department by reason of a violation of either 720 ILCS 5/33E-3 or 720 ILCS 5/33E-4.

   A violation of section 33E-3 would be represented by a conviction of the crime of bid-rigging which, in addition to Class 3 felony sentencing, provides that any person convicted of this offense, or any similar offense of any state or the United States which contains the same elements as this offense shall be barred for 5 years from the date of conviction from contracting with any unit of State or local government. No corporation shall be barred from contracting with any unit of State or local government as a result of a conviction under this Section of any employee or agent of such corporation if the employee so convicted is no longer employed by the corporation: (1) it has been finally adjudicated not guilty or (2) if it demonstrates to the governmental entity with which it seeks to contract that entity finds that the commission of the offense was neither authorized, requested, commanded, nor performed by a director, officer or a high managerial agent on behalf of the corporation.

   A violation of Section 33E-4 would be represented by a conviction of the crime of bid-rotating which, in addition to Class 2 felony sentencing, provides that any person convicted of this offense or any similar offense of any state or the United States which contains the same elements as this offense shall be permanently barred from contracting with any unit of State of Local government. No corporation shall be barred from contracting with any unit of State or Local government as a result of a conviction under this Section of any employee or agent of such corporation if the employee so convicted is no longer employed by the corporation and: (1) it has been finally adjudicated not guilty or (2) if it demonstrates to the governmental entity with which it seeks to contract and that entity finds that the commission of the offense was neither authorized, requested, commanded, nor performed by a director, officer or a high managerial agent on behalf of the corporation.

3. **Bribery.** The bidder or contractor or subcontractor, respectively, certifies that, it has not been convicted of bribery or attempting to bribe an officer or employee of the State of Illinois or any unit of local government, nor has the firm made an admission of guilt of such conduct which is a matter or record, nor has an official, agent, or employee of the firm committed bribery or attempted bribery on behalf of the firm and pursuant to the direction or authorization of a responsible official of the firm.

4. **Interim Suspension or Suspension.** The bidder or contractor or subcontractor, respectively, certifies that it is not currently under a suspension as defined in Subpart I of Title 44 Subtitle A Chapter III Part 6 of the Illinois Administrative code. Furthermore, if suspended prior to completion of this work, the contract or contracts executed for the completion of this work may be canceled.

Local Public Agency	County	Section Number	Route(s) (Street/Road Name)
Joliet Township Road District	Will		Sugar Creek Drive

SIGNATURES

(If an individual)

Bidder Signature & Date

Business Address

City | State | Zip Code

(If a partnership)

Firm Name

Signature & Date

Title

Business Address

City | State | Zip Code

Insert the Names and Addresses of all Partners

(If a corporation)

Corporate Name

Signature & Date

Title

Business Address

City | State | Zip Code

Insert Names of Officers

President

Attest:

Secretary

Secretary

Treasurer

Illinois Department of Transportation

Schedule of Prices

Contractor's Name

Contractor's Address | City | State | Zip Code

Local Public Agency: Joliet Township Road District | County: Will | Section Number

Route(s) (Street/Road Name): Sugar Creek Drive

Schedule for Multiple Bids

Combination Letter	Section Included in Combinations	Total

Schedule for Single Bid
(For complete information covering these items, see plans and specifications.)

Item Number	Items	Unit	Quantity	Unit Price	Total
1	EARTH EXCAVATION	CU YD	111		
2	FURNISHED EXCAVATION	CU YD	27		
3	POROUS GRAN EMBANK	CU YD	83		
4	SEEDING, CLASS 1A	ACRE	0.1		
5	EROSION CONTROL BLANKE	SQ YD	240		
6	STONE RIPRAP, CLASS A4	SQ YD	21		
7	FILTER FABRIC	SQ YD	21		
8	CL D PATCH, TY IV, 6"	SQ YD	113		
9	AGG BASE CSE, TY B, 6"	SQ YD	113		
10	CONC HEADWALL REM (SP)	EACH	2		
11	PIPE CULVERT REMOVAL	FOOT	31		
12	BOX CULV END SECTIONS	EACH	2		
13	PREC CONC BOX CULV 7X2	FOOT	37		
				Bidder's Total Proposal	

1. Each pay item should have a unit price and a total price.
2. If no total price is shown or if there is a discrepancy between the product of the unit price multiplied by the quantity, the unit price shall govern.
3. If a unit price is omitted, the total price will be divided by the quantity in order to establish a unit price.
4. A bid may be declared unacceptable if neither a unit price or total price is shown.

Illinois Department of Transportation

Local Public Agency Proposal Bid Bond

Local Public Agency	County	Section Number
Joliet Township Road District	Will	

WE, _____ as PRINCIPAL, and _____ as SURETY, are held jointly, severally and firmly bound unto the above Local Public Agency (hereafter referred to as "LPA") in the penal sum of 5% of the total bid price, or for the amount specified in the proposal documents in effect on the date of invitation for bids, whichever is the lesser sum. We bind ourselves, our heirs, executors, administrators, successors, and assigns, jointly pay to the LPA this sum under the conditions of this instrument.

WHEREAS THE CONDITION OF THE FOREGOING OBLIGATION IS SUCH that, the said PRINCIPAL is submitting a written proposal to the LPA acting through its awarding authority for the construction of the work designated as the above section.

THEREFORE if the proposal is accepted and a contract awarded to the PRINCIPAL by the LPA for the above designated section and the PRINCIPAL shall within fifteen (15) days after award enter into a formal contract, furnish surety guaranteeing the faithful performance of the work, and furnish evidence of the required insurance coverage, all as provided in the "Standard Specifications for Road and Bridge Construction" and applicable Supplemental Specifications, then this obligation shall become void; otherwise it shall remain in full force and effect.

IN THE EVENT the LPA determines the PRINCIPAL has failed to enter into a formal contract in compliance with any requirements set forth in the preceding paragraph, then the LPA acting through its awarding authority shall immediately be entitled to recover the full penal sum set out above, together with all court costs, all attorney fees, and any other expense of recovery.

IN TESTIMONY WHEREOF, the said PRINCIPAL and the said SURETY have caused this instrument to be signed by their respective officers this _____ of _____
Day Month and Year

Principal

Company Name	Company Name

Signature & Date	Signature & Date
By:	By:
Title	Title

(If Principal is a joint venture of two or more contractors, the company names, and authorized signatures of each contractor must be affixed.)

Surety

Name of Surety	Signature of Attorney-in-Fact Signature & Date
	By:

STATE OF IL

COUNTY OF

I _____ , a Notary Public in and for said county do hereby certify that

_____
(Insert names of individuals signing on behalf of PRINCIPAL & SURETY)

who are each personally known to me to be the same persons whose names are subscribed to the foregoing instrument on behalf of PRINCIPAL and SURETY, appeared before me this day in person and acknowledged respectively, that they signed and delivered said instruments as their free and voluntary act for the uses and purposes therein set forth.

Given under my hand and notarial seal this _____ day of _____ .
Day Month and Year

Notary Public Signature & Date

(SEAL, if required by the LPA)

Date commission expires _____

Local Public Agency	County	Section Number
Joliet Township Road District	Will	

ELECTRONIC BID BOND

☐ **Electronic bid bond is allowed (box must be checked by LPA if electronic bid bond is allowed)**

The Principal may submit an electronic bid bond, in lieu of completing the above section of the Proposal Bid Bond Form. By providing an electronic bid bond ID code and signing below, the Principal is ensuring the identified electronic bid bond has been executed and the Principal and Surety are firmly bound unto the LPA under the conditions of the bid bond as shown above. (If PRINCIPAL is a joint venture of two or more contractors, an electronic bid bond ID code, company/Bidder name title and date must be affixed for each contractor in the venture.)

Electronic Bid Bond ID Code

Company/Bidder Name

Signature & Date

Title

Illinois Department of Transportation

Affidavit of Illinois Business Office

Local Public Agency	County	Street Name/Road Name	Section Number
Joliet Township Road District	Will	Sugar Creek Drive	

I, _____ of _____ , _____ ,
Name of Affiant — City of Affiant — State of Affiant

being first duly sworn upon oath, state as follows:

1. That I am the _____ of _____ .
Officer or Position — Bidder

2. That I have personal knowledge of the facts herein stated.

3. That, if selected under the proposal described above, _____ , will maintain a business office in the
Bidder

State of Illinois, which will be located in _____ County, Illinois.
County

4. That this business office will serve as the primary place of employment for any persons employed in the construction contemplated by this proposal.

5. That this Affidavit is given as a requirement of state law as provided in Section 30-22(8) of the Illinois Procurement Code.

Signature & Date

Print Name of Affiant

Notary Public

State of IL

County _____

Signed (or subscribed or attested) before me on _____ by
(date)

_____ , authorized agent(s) of
(name/s of person/s)

_____ .
Bidder

Notary Public Signature & Date

(SEAL)

My commission expires _____

INDEX
FOR
SUPPLEMENTAL SPECIFICATIONS
AND RECURRING SPECIAL PROVISIONS

Adopted January 1, 2026

This index contains a listing of SUPPLEMENTAL SPECIFICATIONS, frequently used RECURRING SPECIAL PROVISIONS, and LOCAL ROADS AND STREETS RECURRING SPECIAL PROVISIONS.

ERRATA Standard Specifications for Road and Bridge Construction
(Adopted 1-1-22) (Revised 1-1-26)

SUPPLEMENTAL SPECIFICATIONS

Std. Spec. Sec.		Page No.
109	Measurement and Payment	1
202	Earth and Rock Excavation	2
204	Borrow and Furnished Excavation	3
207	Porous Granular Embankment	4
211	Topsoil and Compost	5
214	Grading and Shaping Ditches	6
406	Hot-Mix Asphalt Binder and Surface Course	7
407	Hot-Mix Asphalt Pavement (Full-Depth)	9
420	Portland Cement Concrete Pavement	10
502	Excavation for Structures	11
504	Precast Concrete Structures	12
509	Metal Railings	13
522	Retaining Walls	14
540	Box Culverts	15
542	Pipe Culverts	35
550	Storm Sewers	44
586	Granular Backfill for Structures	51
601	Pipe Drains, Pipe Underdrains, and French Drains	52
630	Steel Plate Beam Guardrail	53
632	Guardrail and Cable Road Guard Removal	54
644	High Tension Cable Median Barrier	55
665	Woven Wire Fence	56
701	Work Zone Traffic Control and Protection	57
781	Raised Reflective Pavement Markers	59
782	Reflectors	60
801	Electrical Requirements	62
821	Roadway Luminaires	65
1003	Fine Aggregates	66
1004	Coarse Aggregates	67
1010	Finely Divided Minerals	69
1020	Portland Cement Concrete	70
1030	Hot-Mix Asphalt	73
1040	Drain Pipe, Tile, and Wall Drain	74
1042	Precast Concrete Products	75
1061	Waterproofing Membrane System	76
1067	Luminaire	77
1097	Reflectors	84
1102	Hot-Mix Asphalt Equipment	85

RECURRING SPECIAL PROVISIONS

The following RECURRING SPECIAL PROVISIONS indicated by an “X” are applicable to this contract and are included by reference:

CHECK SHEET #		PAGE NO.
1	Additional State Requirements for Federal-Aid Construction Contracts	87
2	Subletting of Contracts (Federal-Aid Contracts)	90
3	EEO	91
4	Specific EEO Responsibilities Nonfederal-Aid Contracts	101
5	Required Provisions - State Contracts	106
6	Asbestos Bearing Pad Removal	112
7	Asbestos Waterproofing Membrane and Asbestos Hot-Mix Asphalt Surface Removal	113
8	Temporary Stream Crossings and In-Stream Work Pads	114
9	Construction Layout Stakes	115
10	Use of Geotextile Fabric for Railroad Crossing	118
11	Subsealing of Concrete Pavements	120
12	Hot-Mix Asphalt Surface Correction	124
13	Pavement and Shoulder Resurfacing	126
14	Patching with Hot-Mix Asphalt Overlay Removal	127
15	Polymer Concrete	129
16	Reserved	131
17	Bicycle Racks	132
18	Temporary Portable Bridge Traffic Signals	134
19	Nighttime Inspection of Roadway Lighting	136
20	English Substitution of Metric Bolts	137
21	Calcium Chloride Accelerator for Portland Cement Concrete	138
22	Quality Control of Concrete Mixtures at the Plant	139
23	Quality Control/Quality Assurance of Concrete Mixtures	147
24	Reserved	163
25	Reserved	164
26	Temporary Raised Pavement Markers	165
27	Restoring Bridge Approach Pavements Using High-Density Foam	166
28	Portland Cement Concrete Inlay or Overlay	169
29	Portland Cement Concrete Partial Depth Hot-Mix Asphalt Patching	173
30	Longitudinal Joint and Crack Patching	176
31	Concrete Mix Design – Department Provided	178
32	Station Numbers in Pavements or Overlays	179

Illinois Department of Transportation

Check Sheet for Recurring Special Provisions

Local Public Agency	County	Section Number
Joliet Township Road District	Will	

☐ **Check this box for lettings prior to 01/01/2026**

The Following Recurring Special Provisions Indicated By An "X" Are Applicable To This Contract And Are Included By Reference:

Recurring Special Provisions

Check Sheet #			Page No.
1	☐	Additional State Requirements for Federal-Aid Construction Contracts	87
2	☐	Subletting of Contracts (Federal-Aid Contracts)	90
3	☐	EEO	91
4	☐	Specific EEO Responsibilities Non Federal-Aid Contracts	101
5	☐	Required Provisions - State Contracts	106
6	☐	Asbestos Bearing Pad Removal	112
7	☐	Asbestos Waterproofing Membrane and Asbestos HMA Surface Removal	113
8	☐	Temporary Stream Crossings and In-Stream Work Pads	114
9	☐	Construction Layout Stakes	115
10	☐	Use of Geotextile Fabric for Railroad Crossing	118
11	☐	Subsealing of Concrete Pavements	120
12	☐	Hot-Mix Asphalt Surface Correction	124
13	☐	Pavement and Shoulder Resurfacing	126
14	☐	Patching with Hot-Mix Asphalt Overlay Removal	127
15	☐	Polymer Concrete	129
16	☐	Reserved	131
17	☐	Bicycle Racks	132
18	☐	Temporary Portable Bridge Traffic Signals	134
19	☐	Nighttime Inspection of Roadway Lighting	136
20	☐	English Substitution of Metric Bolts	137
21	☐	Calcium Chloride Accelerator for Portland Cement Concrete	138
22	☐	Quality Control of Concrete Mixtures at the Plant	139
23	☐	Quality Control/Quality Assurance of Concrete Mixtures	147
24	☐	Reserved	163
25	☐	Reserved	164
26	☐	Temporary Raised Pavement Markers	165
27	☐	Restoring Bridge Approach Pavements Using High-Density Foam	166
28	☐	Portland Cement Concrete Inlay or Overlay	169
29	☐	Portland Cement Concrete Partial Depth Hot-Mix Asphalt Patching	173
30	☐	Longitudinal Joint and Crack Patching	176
31	☐	Concrete Mix Design - Department Provided	178
32	☐	Station Numbers in Pavements or Overlays	179

Local Public Agency	County	Section Number
Joliet Township Road District	Will	

The Following Local Roads And Streets Recurring Special Provisions Indicated By An "X" Are Applicable To This Contract And Are Included By Reference:

Local Roads And Streets Recurring Special Provisions

Check Sheet #			Page No.
LRS 1		**Reserved**	181
LRS 2	☒	Furnished Excavation	182
LRS 3	☒	Work Zone Traffic Control Surveillance	183
LRS 4	☒	Flaggers in Work Zones	184
LRS 5	☒	Contract Claims	185
LRS 6	☒	Bidding Requirements and Conditions for Contract Proposals	186
LRS 7	☐	Bidding Requirements and Conditions for Material Proposals	192
LRS 8		**Reserved**	198
LRS 9	☐	Bituminous Surface Treatments	199
LRS 10		**Reserved**	203
LRS 11	☒	Employment Practices	204
LRS 12	☒	Wages of Employees on Public Works	206
LRS 13	☒	Selection of Labor	208
LRS 14	☐	Paving Brick and Concrete Paver Pavements and Sidewalks	209
LRS 15	☒	Partial Payments	212
LRS 16	☒	Protests on Local Lettings	213
LRS 17	☒	Substance Abuse Prevention Program	214
LRS 18	☐	Multigrade Cold Mix Asphalt	215
LRS 19	☐	Reflective Crack Control Treatment	216

BDE SPECIAL PROVISIONS
For the July 31 and September 18, 2026 Lettings

The following special provisions indicated by a “check mark” are applicable to this contract and will be included by the Project Coordination and Implementation Section of the Bureau of Design & Environment (BDE).

	File Name	#		Special Provision Title	Effective	Revised
	80099	1	☐	Accessible Pedestrian Signals (APS)	April 1, 2003	Jan. 1, 2022
	80274	2	☐	Aggregate Subgrade Improvement	April 1, 2012	April 1, 2022
	80192	3	☐	Automated Flagger Assistance Devices	Jan. 1, 2008	April 1, 2023
	80173	4	☐	Bituminous Materials Cost Adjustments	Nov. 2, 2006	Aug. 1, 2017
	80426	5	☐	Bituminous Surface Treatment with Fog Seal	Jan. 1, 2020	April 1, 2026
	80475	6	☐	Bridge Deck Concrete Overlays	Jan. 1, 2026	
*	80241	7	☐	Bridge Demolition Debris	July 1, 2009	
*	5053I	8	☐	Building Removal	Sept. 1, 1990	Aug. 1, 2022
*	5026I	9	☐	Building Removal with Asbestos Abatement	Sept. 1, 1990	Aug. 1, 2022
	80460	10	☐	Cement, Finely Divided Minerals, Admixtures, Concrete, and Mortar	Jan. 1, 2025	Jan. 1, 2026
	80384	11	☐	Compensable Delay Costs	June 2, 2017	April 1, 2019
*	80198	12	☐	Completion Date (via calendar days)	April 1, 2008	
*	80199	13	☐	Completion Date (via calendar days) Plus Working Days	April 1, 2008	
	80461	14	☐	Concrete Barrier	Jan. 1, 2025	
	80453	15	☐	Concrete Sealer	Nov. 1, 2023	
	80261	16	☐	Construction Air Quality – Diesel Retrofit	June 1, 2010	Jan. 1, 2025
	80476	17	☐	Deck Slab Repair	Jan. 1, 2026	
*	80029	18	☐	Disadvantaged Business Enterprise Participation	Sept. 1, 2000	Jan. 2, 2025
	80467	19	☐	Erosion Control Blanket	Aug. 1, 2025	
	80229	20	☐	Fuel Cost Adjustment	April 1, 2009	Aug. 1, 2017
	80452	21	☐	Full Lane Sealant Waterproofing System	Nov. 1, 2023	
	80433	22	☐	Green Preformed Thermoplastic Pavement Markings	Jan. 1, 2021	Jan. 1, 2022
	80471	23	☐	Guardrail	Nov. 1, 2025	
	80472	24	☐	High Friction Surface Treatment	Nov. 1, 2025	
	80456	25	☐	Hot-Mix Asphalt	Jan. 1, 2024	April 1, 2026
	80446	26	☐	Hot-Mix Asphalt - Longitudinal Joint Sealant	Nov. 1, 2022	Aug. 1, 2023
	80438	27	☐	Illinois Works Apprenticeship Initiative – State Funded Contracts	June 2, 2021	April 2, 2024
	80483	28	☐	Inlet Filters	April 1, 2026	
	80477	29	☐	Longitudinal Tining	Jan. 1, 2026	July 1, 2026
	80450	30	☐	Mechanically Stabilized Earth Retaining Walls	Aug. 1, 2023	Aug. 1, 2025
	80478	31	☐	Modified Longitudinal Construction Joint	Jan. 1, 2026	
	80464	32	☐	Pavement Marking	April. 1, 2025	Nov. 1, 2025
	80468	33	☐	Pavement Patching	Aug. 1, 2025	
	80441	34	☐	Performance Graded Asphalt Binder	Jan. 1, 2023	
	80459	35	☐	Preformed Plastic Pavement Marking	June 2, 2024	
*	3426I	36	☐	Railroad Protective Liability Insurance	Dec. 1, 1986	Jan. 1, 2022
	80473	37	☐	Raised Reflective Pavement Markers	Nov. 1, 2025	
	80455	38	☐	Removal and Disposal of Regulated Substances	Jan. 1, 2024	April 1, 2026
	80474	39	☐	Residential Driveway Temporary Signal	Nov. 1, 2025	
	80445	40	☐	Seeding	Nov. 1, 2022	July 1, 2026
	80457	41	☐	Short Term and Temporary Pavement Markings	April 1, 2024	April 2, 2024
	80462	42	☐	Sign Panels and Appurtenances	Jan. 1, 2025	Jan. 1, 2026
	80479	43	☐	Sinusoidal Rumble Strips	Jan. 1, 2026	
	80469	44	☐	Slope Wall	Aug. 1, 2025	
	80448	45	☐	Source of Supply and Quality Requirements	Jan. 2, 2023	Jan. 1, 2026
	80340	46	☐	Speed Display Trailer	April 2, 2014	Jan. 1, 2022
	80127	47	☐	Steel Cost Adjustment	April 2, 2004	Nov. 1, 2025
	80480	48	☐	Structural Repair of Concrete	Jan. 1, 2026	
	80397	49	☐	Subcontractor and DBE Payment Reporting	April 2, 2018	
	80391	50	☐	Subcontractor Mobilization Payments	Nov. 2, 2017	April 1, 2019
	80463	51	☐	Submission of Bidders List Information	Jan. 2, 2025	Mar. 2, 2025

	80482	52	☐	Submission of Payroll Records – Federal Aid Contract	April 1, 2026	
	80437	53	☐	Submission of Payroll Records – State Contract	April 1, 2021	April 1, 2026
	80435	54	☐	Surface Testing of Pavements – IRI	Jan. 1, 2021	Jan. 1, 2023
	80465	55	☐	Surveying Services	April 1, 2025	
	80481	56	☐	Temporary Concrete Barrier	Jan. 1, 2026	
	80466	57	☐	Temporary Rumble Strips	April 1, 2025	
	80484	58	☐	Tolerance in Thickness for Continuously Reinforced PCC Pavement	July 1, 2026	
	80470	59	☐	Traffic Signal Backplate	Aug. 1, 2025	
*	20338	60	☐	Training Special Provisions	Oct. 15, 1975	Sept. 2, 2021
	80429	61	☐	Ultra-Thin Bonded Wearing Course	April 1, 2020	Jan. 1, 2022
	80439	62	☐	Vehicle and Equipment Warning Lights	Nov. 1, 2021	Nov. 1, 2022
	80458	63	☐	Waterproofing Membrane System	Aug. 1, 2024	
	80302	64	☐	Weekly DBE Trucking Reports	June 2, 2012	Jan. 2, 2025
	80454	65	☐	Wood Sign Support	Nov. 1, 2023	
	80427	66	☐	Work Zone Traffic Control Devices	Mar. 2, 2020	Jan. 1, 2026
	80485	67	☐	Work Zone Width Restriction	July 1, 2026	
*	80071	68	☑	Working Days	Jan. 1, 2002	

Highlighted items indicate a new or revised special provision for the letting.

An * indicates the special provision requires additional information from the designer, which needs to be submitted separately. The Project Coordination and Implementation Section will then include the information in the applicable special provision.

The following special provisions are in the 2026 Supplemental Specifications and Recurring Special Provisions.

File Name	Special Provision Title	New Location(s)	Effective	Revised
80447	Grading and Shaping Ditches	Articles 214.03 & 214.04	Jan. 1, 2023	

Illinois Department of Transportation

Special Provisions

Local Public Agency	County	Section Number
Joliet Township Road District	Will	

The following Special Provision supplement the "Standard Specifications for Road and Bridge Construction", adopted January 1, 2022, the latest edition of the "Manual on Uniform Traffic Control Devices for Streets and Highways", and the "Manual of Test Procedures of Materials" in effect on the date of invitation of bids, and the Supplemental Specification and Recurring Special Provisions indicated on the Check Sheet included here in which apply to and govern the construction of the above named section, and in case of conflict with any parts, or parts of said Specifications, the said Special Provisions shall take precedence and shall govern.

Description of Work: This project includes Pipe Culvert Removal, Concrete Headwall Removal (Special), Precast Concrete Box Culverts 7' X 2', Box Culvert End Sections, Class D Patches Ty. IV 6", Stone Riprap Cl A4, and all other items necessary to complete the work.

Location of Work: This work is located on Sugar Creek Drive, between Valley Parkway East and Valley Parkway West, in Joliet Township.

Traffic Control: The contractor shall obtain, erect, maintain and remove all signs, barricades, flaggers and other traffic control devices as may be necessary for the purpose of regulation, warning or guiding traffic. Placement and maintenance of traffic control devices shall be as directed by the Engineer and in accordance with the applicable parts of Article 107.14 of the Standard Specifications and the Illinois Manual on Uniform Traffic Control Devices for Streets and Highways. All traffic control protection will be considered included in the cost of the contract and will not be paid for separately.

Access shall be maintained to all properties within project limits during the course of construction activities. One lane of access is to be maintained at the intersection of Sugar Creek Drive and Valley Parkway East.

Working Days: All required work shall be completed within 15 working days in accordance with Section 108.04 of the Standard Specifications. If work is not completed within the specified working days, daily charges will be made according to Section 108.09 of the Standard Specifications.

Prequalification of Bidders: Prequalification of Bidders in accordance with Section 102.01 of the Standard Specifications will be required of all bidders on this proposal.

Reclaimed Asphalt Pavement: The use of Reclaimed Asphalt Pavement (RAP) will be allowed in Hot-Mix Asphalt Surface Course Material according to Section 1031 of the 2022 Standard Specifications and Recurring Special Provisions.

Bituminous Material (Tack Coat): Bituminous Materials (Tack Coat) shall be in accordance with Section 406 of the Standard Specifications.

Concrete Headwall Removal (Special): At the north end of the existing CMP, the existing stone brick headwall and adjacent concrete walls are to be removed. At the south end of the existing CMP, the existing stone brick headwall and a portion of the adjacent concrete/stone slab are to be removed, as detailed in the plans. Any work necessary to remove the concrete items will be paid for as Concrete Headwall Removal (Special).
At the north end of the existing CMP and headwall, there are chunks of bituminous asphalt, concrete, stone, and brick to be removed. The cost of this removal is to be included in the cost of Concrete Headwall Removal (Special). Special care is to be exercised when removing these materials in the vicinity of any existing trees.
At the south end of the existing CMP and headwall, there is a concrete/rock surface carrying the flow into the culvert opening. A section of this surface is to be removed to allow for the installation of the proposed

Local Public Agency	County	Section Number
Joliet Township Road District	Will	

precast box culvert 7' X 2' and box culvert end section with toewall. The remaining concrete/rock surface outside of this area is to remain in place. The cost of this removal is to be included in the cost of Concrete Headwall Removal (Special). Special care is to be exercised when removing the necessary concrete/rock surface to ensure that the water overflow surface at the pond does not get damaged or altered in any way.

WORKING DAYS (BDE)

Effective: January 1, 2002

The Contractor shall complete the work within 15 working days.

80071

Will County
Joliet Township Highway Department
Sugar Creek Drive Spillway

CLEAN WATER ACT
SECTION 404 CERTIFICATION

I hereby certify the construction activities for this project meet the terms and conditions contained within the U.S. Army Corp of Engineers – Nationwide Permit No. 14 for Linear Transportation Projects. The Contractor shall abide by the terms and conditions contained within the enclosed Illinois Regional Conditions and the Environmental Protection Agency Section 401 Water Quality Certification.

The Contractor shall be responsible to obtain any necessary Individual Permits from the U.S. Army Corp of Engineers Corps prior to beginning any work on or adjacent to the waterway.

The Contractor shall be responsible for denying public use and access to any temporary crossings constructed as part of the project.

Luke Zeller, P.E. Date: 05/01/2026

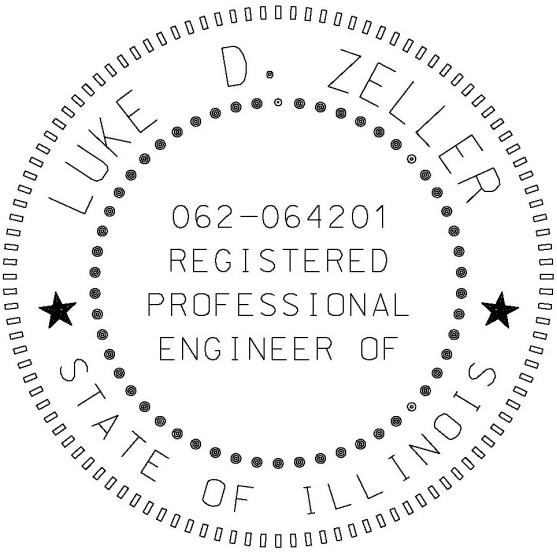

2026 Nationwide Permits

Nationwide Permits, Conditions, Further Information, and Definitions[1]

A. Index of Nationwide Permits, Conditions, District Engineer's Decision, Further Information, and Definitions

Nationwide Permits

1. Aids to Navigation
2. Structures in Artificial Canals
3. Maintenance
4. Fish and Wildlife Harvesting, Enhancement, and Attraction Devices and Activities
5. Scientific Measurement Devices
6. Survey Activities
7. Outfall Structures and Associated Intake Structures
8. Oil and Gas Structures on the Outer Continental Shelf
9. Structures in Fleeting and Anchorage Areas
10. Mooring Buoys
11. Temporary Recreational Structures
12. Oil or Natural Gas Pipeline Activities
13. Bank Stabilization
14. Linear Transportation Projects
15. U.S. Coast Guard Approved Bridges
16. Return Water From Upland Contained Disposal Areas
17. Hydropower Projects
18. Minor Discharges
19. Minor Dredging
20. Response Operations for Oil or Hazardous Substances
21. Surface Coal Mining Activities
22. Removal of Vessels
23. Approved Categorical Exclusions
24. Indian Tribe or State Administered Section 404 Programs
25. Structural Discharges
26. [Reserved]
27. Aquatic Ecosystem Restoration, Enhancement, and Establishment Activities
28. Modifications of Existing Marinas

[1] The 2026 Nationwide Permits, General Conditions, District Engineer's Decision, Further Information, and Definitions were published in the Federal Register on January 8, 2026 (91 FR 768).

29. Residential Developments
30. Moist Soil Management for Wildlife
31. Maintenance of Existing Flood Control Facilities
32. Completed Enforcement Actions
33. Temporary Construction, Access, and Dewatering
34. Cranberry Production Activities
35. Maintenance Dredging of Existing Basins
36. Boat Ramps
37. Emergency Watershed Protection and Rehabilitation
38. Cleanup of Hazardous and Toxic Waste
39. Commercial and Institutional Developments
40. Agricultural Activities
41. Reshaping Existing Drainage and Irrigation Ditches
42. Recreational Facilities
43. Stormwater Management Facilities
44. Mining Activities
45. Repair of Uplands Damaged by Discrete Events
46. Discharges in Ditches
47. [Reserved]
48. Commercial Shellfish Mariculture Activities
49. Coal Remining Activities
50. Underground Coal Mining Activities
51. Land-Based Renewable Energy Generation Facilities
52. Water-Based Renewable Energy Generation Pilot Projects
53. Removal of Low-Head Dams
54. Living Shorelines
55. Seaweed Mariculture Activities
56. [Reserved]
57. Electric Utility Line and Telecommunications Activities
58. Utility Line Activities for Water and Other Substances
59. Water Reclamation and Reuse Facilities
60. Activities to Improve Passage of Fish and Other Aquatic Organisms

<u>Nationwide Permit General Conditions</u>

1. Navigation
2. Aquatic Life Movements
3. Spawning Areas
4. Migratory Bird Breeding Areas
5. Shellfish Beds
6. Suitable Material
7. Water Supply Intakes
8. Adverse Effects from Impoundments
9. Management of Water Flows
10. Fills Within 100-Year Floodplains
11. Equipment

12. Soil Erosion and Sediment Controls
13. Removal of Temporary Fills
14. Proper Maintenance
15. Single and Complete Project
16. Wild and Scenic Rivers
17. Tribal Rights
18. Endangered Species
19. Migratory Birds and Bald and Golden Eagles
20. Historic Properties
21. Discovery of Previously Unknown Remains and Artifacts
22. Designated Critical Resource Waters
23. Mitigation
24. Safety of Impoundment Structures
25. Water Quality
26. Coastal Zone Management
27. Regional and Case-by-Case Conditions
28. Use of Multiple Nationwide Permits
29. Transfer of Nationwide Permit Verifications
30. Compliance Certification
31. Activities Affecting Structures or Works Built by the United States
32. Pre-Construction Notification

District Engineer's Decision

Further Information

Nationwide Permit Definitions

Best management practices (BMPs)
Compensatory mitigation
Currently serviceable
Direct effects
Discharge
Ecological reference
Enhancement
Establishment (creation)
High Tide Line
Historic property
Independent utility
Indirect effects
Loss of waters of the United States
Nature-based solutions
Navigable waters
Non-tidal wetland
Open water
Ordinary high water mark

Perennial stream
Practicable
Pre-construction notification
Preservation
Re-establishment
Rehabilitation
Restoration
Riffle and pool complex
Riparian areas
Shellfish seeding
Single and complete linear project
Single and complete non-linear project
Stormwater management
Stormwater management facilities
Stream bed
Stream channelization
Structure
Tidal wetland
Tribal lands
Tribal rights
Vegetated shallows
Waterbody

B. Nationwide Permits

1. Aids to Navigation. The placement of aids to navigation and regulatory markers that are approved by and installed in accordance with the requirements of the U.S. Coast Guard (see 33 CFR, chapter I, subchapter C, part 66). (Authority: Section 10 of the Rivers and Harbors Act of 1899 (Section 10))

2. Structures in Artificial Canals. Structures constructed in artificial canals within principally residential developments where the connection of the canal to a navigable water of the United States has been previously authorized (see 33 CFR 322.5(g)). (Authority: Section 10)

3. Maintenance. (a) The repair, rehabilitation, or replacement of any previously authorized, currently serviceable structure or fill, or of any currently serviceable structure or fill authorized by 33 CFR 330.3, provided that the structure or fill is not to be put to uses differing from those uses specified or contemplated for it in the original permit or the most recently authorized modification. Minor deviations in the structure's configuration or filled area, including those due to changes in materials, construction techniques, requirements of other regulatory agencies, or current construction codes or safety standards that are necessary to make the repair, rehabilitation, or replacement are authorized. This NWP also authorizes the removal of previously authorized structures or fills. Any stream channel modification is limited to the minimum necessary for the repair, rehabilitation, or replacement of the structure or fill; such modifications, including the removal of material from the stream channel, must be immediately adjacent to the project. This NWP also authorizes the removal of accumulated sediment and

Notification: The permittee must submit a pre-construction notification to the district engineer prior to commencing the activity if the bank stabilization activity: (1) involves discharges of dredged or fill material into special aquatic sites; or (2) is in excess of 500 feet in length; or (3) will involve the discharge of dredged or fill material of greater than an average of one cubic yard per running foot as measured along the length of the treated bank, below the plane of the ordinary high water mark or the high tide line. (See general condition 32.) (Authorities: Sections 10 and 404)

Note 1: In coastal waters and the Great Lakes, living shorelines may be an appropriate option for bank stabilization, and may be authorized by NWP 54.

Note 2: Under 33 CFR 320.4(g)(2), a landowner has the general right to protect his or her property from erosion, and the district engineer can provide general guidance to the landowner regarding possible alternative methods of protecting his or her property. Permittees are encouraged to use soft bank stabilization approaches (e.g., bioengineering, vegetative stabilization) at sites where those methods are likely to be effective in managing erosion, such as sites where shorelines and banks are subject to moderate to low erosive forces. However, hard bank stabilization activities (e.g., seawalls, bulkheads, revetments, riprap) may be necessary at sites where shorelines and banks are subject to strong erosive forces. An appropriate and effective approach to managing shoreline or bank erosion at a specific site requires consideration of a variety of factors, including but not limited to: bank height; bank condition; the energy of tides, waves, currents, or other water flows that the bank is exposed to; fetch; nearshore water depths; the potential for storm surges; sediment or substrate type; tidal range in waters subject to the ebb and flow of tides; shoreline configuration and orientation; the width of the waterway; and whether there is infrastructure in the vicinity of the proposed bank stabilization activity that needs to be protected and the degree of protection needed.

14. Linear Transportation Projects. Activities required for crossings of waters of the United States associated with the construction, expansion, modification, or improvement of linear transportation projects (e.g., roads, highways, railways, trails, driveways, airport runways, and taxiways) in waters of the United States. For linear transportation projects in non-tidal waters, the discharge of dredged or fill material cannot cause the loss of greater than 1/2-acre of waters of the United States. For linear transportation projects in tidal waters, the discharge of dredged or fill material cannot cause the loss of greater than 1/3-acre of waters of the United States. Any stream channel modification, including bank stabilization, is limited to the minimum necessary to construct or protect the linear transportation project; such modifications must be in the immediate vicinity of the project.

This NWP also authorizes temporary structures, fills, and work, including the use of temporary mats, necessary to construct the linear transportation project. Appropriate measures must be taken to maintain normal downstream flows and minimize flooding to the maximum extent practicable, when temporary structures, work, and discharges of dredged or fill material, including cofferdams, are necessary for construction activities, access fills, or dewatering of construction sites. Temporary fills must consist of materials, and be placed in a manner, that

will not be eroded by expected high flows. Temporary fills must be removed in their entirety and the affected areas returned to pre-construction elevations. The areas affected by temporary fills must be revegetated, as appropriate.

This NWP cannot be used to authorize non-linear features commonly associated with transportation projects, such as vehicle maintenance or storage buildings, parking lots, train stations, or aircraft hangars.

Notification: The permittee must submit a pre-construction notification to the district engineer prior to commencing the activity if: (1) the loss of waters of the United States exceeds 1/10-acre; or (2) there is a discharge of dredged or fill material in a special aquatic site, including wetlands. (See general condition 32.) (Authorities: Sections 10 and 404)

Note 1: For linear transportation projects crossing a single waterbody more than one time at separate and distant locations, or multiple waterbodies at separate and distant locations, each crossing is considered a single and complete project for purposes of NWP authorization. Linear transportation projects must comply with 33 CFR 330.6(d).

Note 2: Some discharges of dredged or fill material for the construction of farm roads or forest roads, or temporary roads for moving mining equipment, may qualify for an exemption under Section 404(f) of the Clean Water Act (see 33 CFR 323.4).

Note 3: For NWP 14 activities that require pre-construction notification, the PCN must include any other NWP(s), regional general permit(s), or individual permit(s) used or intended to be used to authorize any part of the proposed project or any related activity, including other separate and distant crossings that require Department of the Army authorization but do not require pre-construction notification (see paragraph (b)(4) of general condition 32). The district engineer will evaluate the PCN in accordance with Section D, "District Engineer's Decision." The district engineer may require mitigation to ensure that the authorized activity results in no more than minimal individual and cumulative adverse environmental effects (see general condition 23).

15. U.S. Coast Guard Approved Bridges. Discharges of dredged or fill material incidental to the construction of a bridge across navigable waters of the United States, including cofferdams, abutments, foundation seals, piers, and temporary construction and access fills, provided the construction of the bridge structure has been authorized by the U.S. Coast Guard under the General Bridge Act of 1946, Section 9 of the Rivers and Harbors Act of 1899, or other applicable laws. Causeways and approach fills are not included in this NWP and will require a separate Clean Water Act Section 404 permit. (Authority: Section 404 of the Clean Water Act (Section 404))

16. Return Water From Upland Contained Disposal Areas. Return water from an upland contained dredged material disposal area. The return water from a contained disposal area is administratively defined as a discharge of dredged material by 33 CFR 323.2(d), even though the disposal itself occurs in an area that has no waters of the United States and does not require a section 404 permit. This NWP satisfies the technical requirement for a section 404

State of Illinois
Department of Transportation
Bureau of Local Roads and Streets

SPECIAL PROVISION FOR INSURANCE

Effective: February 1, 2007
Revised: August 1, 2007

All references to Sections or Articles in this specification shall be construed to mean specific Section or Article of the Standard Specifications for Road and Bridge Construction, adopted by the Department of Transportation.

The Contractor shall name the following entities as additional insured under the Contractor's general liability insurance policy in accordance with Article 107.27:

Joliet Township

Hutchison Engineering Inc.

The entities listed above and their officers, employees, and agents shall be indemnified and held harmless in accordance with Article 107.26.

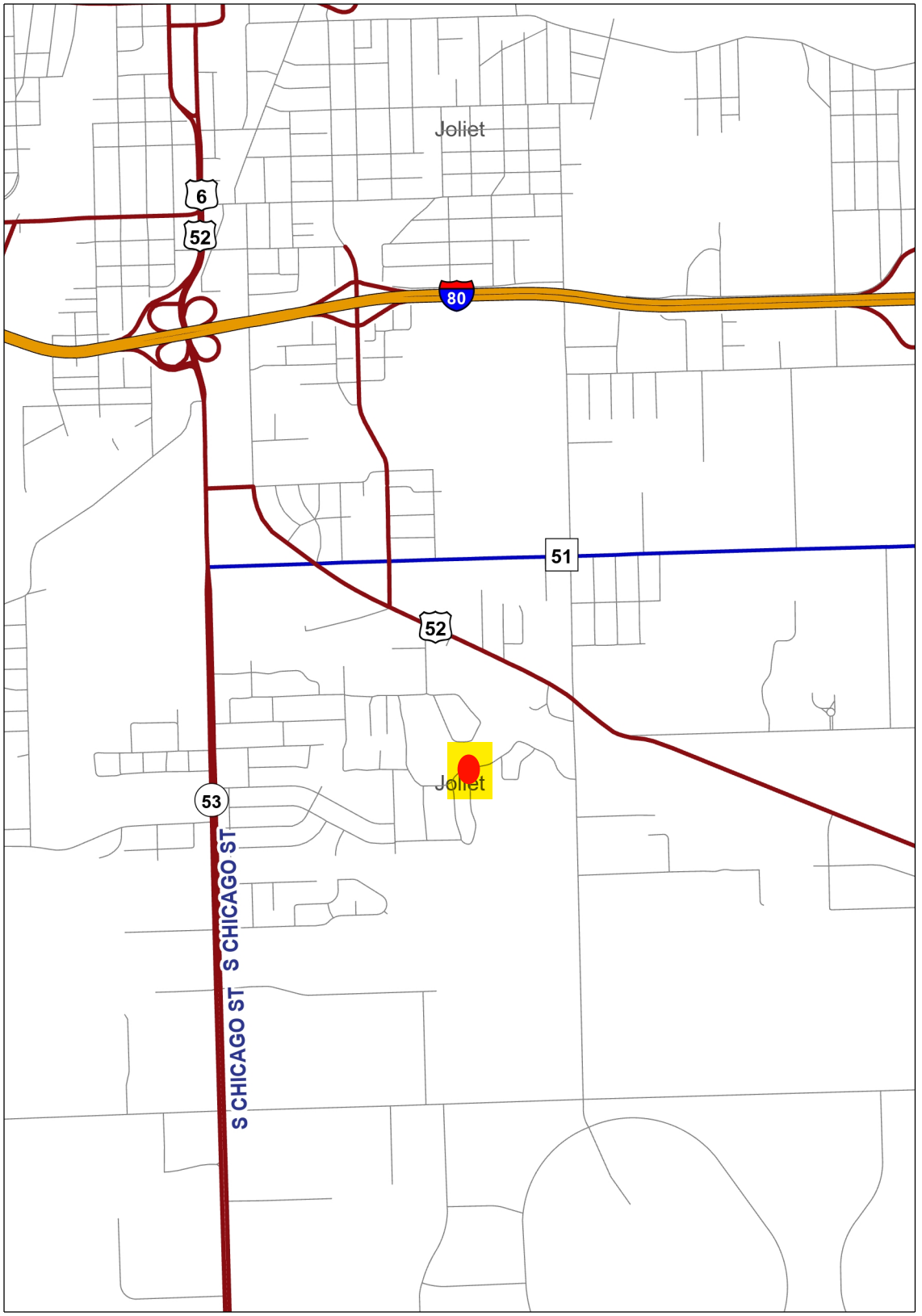

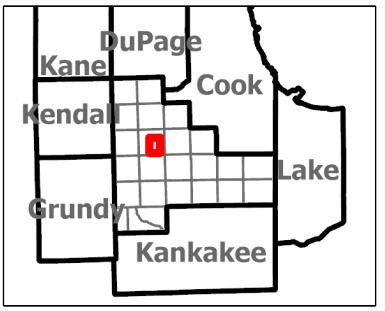

Legend

Roadways

- Federal
- State
- County
- Local and Private

Surrounding Counties

Townships

Notes

Date: 9/2/2025

1: 36,112

0 0.57 1.14 Miles

Projection

WGS_1984_Web_Mercator_Auxiliary_Sphere

Disclaimer of Warranties and Accuracy of Data: Although the data developed by Will County for its maps, websites, and Geographic Information System has been produced and processed from sources believed to be reliable, no warranty, expressed or implied, is made regarding accuracy, adequacy, completeness, legality, reliability or usefulness of any information. This disclaimer applies to both isolated and aggregate uses of the information. The County and elected officials provide this information on an "as is" basis. All warranties of any kind, express or implied, including but not limited to the implied warranties of merchantability, fitness for a particular purpose, freedom from contamination by computer viruses or hackers and non-infringement of proprietary rights are disclaimed. Changes may be periodically made to the information herein; these changes may or may not be incorporated in any new version of the publication. If you have obtained information from any of the County web pages from a source other than the County pages, be aware that electronic data can be altered subsequent to original distribution. Data can also quickly become out of date. It is recommended that careful attention be paid to the contents of any data, and that the originator of the data or information be contacted with any questions regarding appropriate use. Please direct any questions or issues via email to gis@willcountyillinois.com.

SUMMARY OF QUANTITIES

ITEM NO.	SPECIALTY ITEM &/OR SPECIAL PROVISION	CODE NO.	ITEM	UNIT	TOTAL QUANTITY
1		1	EARTH EXCAVATION	CU YD	111
2		2	FURNISHED EXCAVATION	CU YD	27
3		3	POROUS GRANULAR EMBANKMENT	CU YD	83
4		4	SEEDING, CLASS 1A	ACRE	0.1
5		5	EROSION CONTROL BLANKET	SQ YD	240
6		6	STONE RIPRAP, CLASS A4	SQ YD	21
7		7	FILTER FABRIC	SQ YD	21
8		8	CLASS D PATCHES, TYPE IV, 6 INCH	SQ YD	113
9		9	AGGREGATE BASE COURSE, TYPE B, 6"	SQ YD	113
10	*	10	CONCRETE HEADWALL REMOVAL (SPECIAL)	EACH	2
11		11	PIPE CULVERT REMOVAL	FOOT	31
12		12	BOX CULVERT END SECTIONS, CULVERT NO. 1	EACH	2
13		13	PRECAST CONCRETE BOX CULVERTS 7' X 2'	FOOT	37

EARTHWORK

LOCATION	EARTH EXCAVATION	FURNISHED EXCAVATION	SEEDING, CLASS 1A	EROSION CONTROL BLANKET
	CU YD	CU YD	ACRE	SQ YD
SUGAR CREEK DRIVE	111	27	0.1	240
SUB-TOTAL	111	27	0.1	240
TOTAL	111	27	0.1	240

PAVEMENT

LOCATION	AGGREGATE BASE COURSE, TY. B, 6"	CLASS D PATCHES, TYPE IV, 6 INCH
	SQ YD	SQ YD
SUGAR CREEK DRIVE	113	113
TOTAL	113	113

PRECAST BOX CULVERT

LOCATION	SIDE	POROUS GRANULAR EMBANKMENT	STONE RIPRAP, CLASS A4	FILTER FABRIC	CONCRETE HEADWALL REMOVAL (SPECIAL)	PIPE CULVERT REMOVAL	BOX CULVERT END SECTIONS, CULVERT NO. 1	PRECAST CONCRETE BOX CULVERTS 7' X 2'
		CU YD	SQ YD	SQ YD	EACH	FOOT	EACH	FOOT
SUGAR CREEK	X-RD	83	21	21	2	31	2	37
SUB-TOTAL		83	21	21	2	31	2	37
TOTAL		83	21	21	2	31	2	37

MODEL: Sugar Creek Drive - SOQ
FILE NAME: V:\Joliet Township Road District\5639 Sugar Creek Road Spillway\CADD\CADD Sheets\5639-SugarCreekSpillway-soq.dgn

Hutchison Engineering, Inc.

USER NAME = estorm	DESIGNED -	REVISED -
	DRAWN -	REVISED -
	CHECKED -	REVISED -
PLOT DATE = 7/29/2026	DATE -	REVISED -

JOLIET TOWNSHIP ROAD DISTRICT

SOQ & QUANTITIES
SUGAR CREEK DRIVE & VALLEY PARKWAY EAST

SCALE: | SHEET 000 OF 1 SHEETS | STA. TO STA.

F.A. RTE.	SECTION	COUNTY	TOTAL SHEETS	SHEET NO.
		WILL	6	1

CONTRACT NO.

ILLINOIS | FED. AID PROJECT

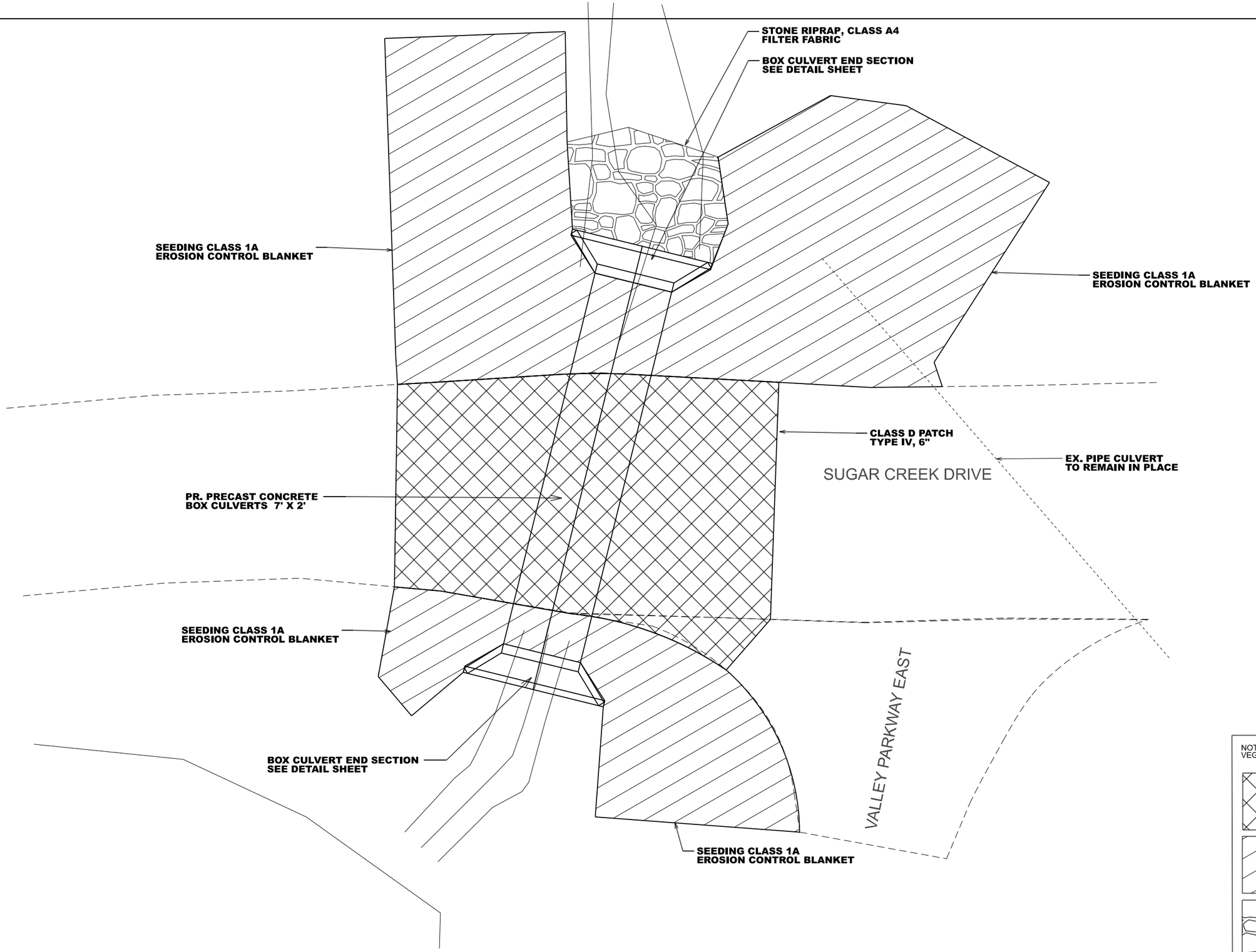

NOTE: THE TOP 4" OF EMBANKMENT SHALL CONSIST OF VEGETATION SUSTAINING SOIL

CLASS D PATCH, TYPE IV, 6"

SEEDING CLASS 1A
EROSION CONTROL BLANKET

STONE RIPRAP, CLASS A4
FILTER FABRIC

MODEL: Sugar Creek Dr - Plan [Sheet]
FILE NAME: V:\Joliet Township Road Disirict\5639 Sugar Creek Road Spillway\CADD\CADD Drawings\5639-SugarCreekSpillway-design - Copy.dgn

USER NAME = estorm	DESIGNED -	REVISED -	
	DRAWN -	REVISED -	
	CHECKED -	REVISED -	
PLOT DATE = 7/15/2026	DATE -	REVISED -	

JOLIET TOWNSHIP
HIGHWAY DEPARTMENT

PLAN
SUGAR CREEK DRIVE

SCALE: 1"=5' | SHEET Roadway Plan OF SHEETS | STA. 0+00.00 | TO STA. 1+50.00

F.A. RTE.	SECTION	COUNTY	TOTAL SHEETS	SHEET NO.
			6	2

CONTRACT NO.

ILLINOIS | FED. AID PROJECT

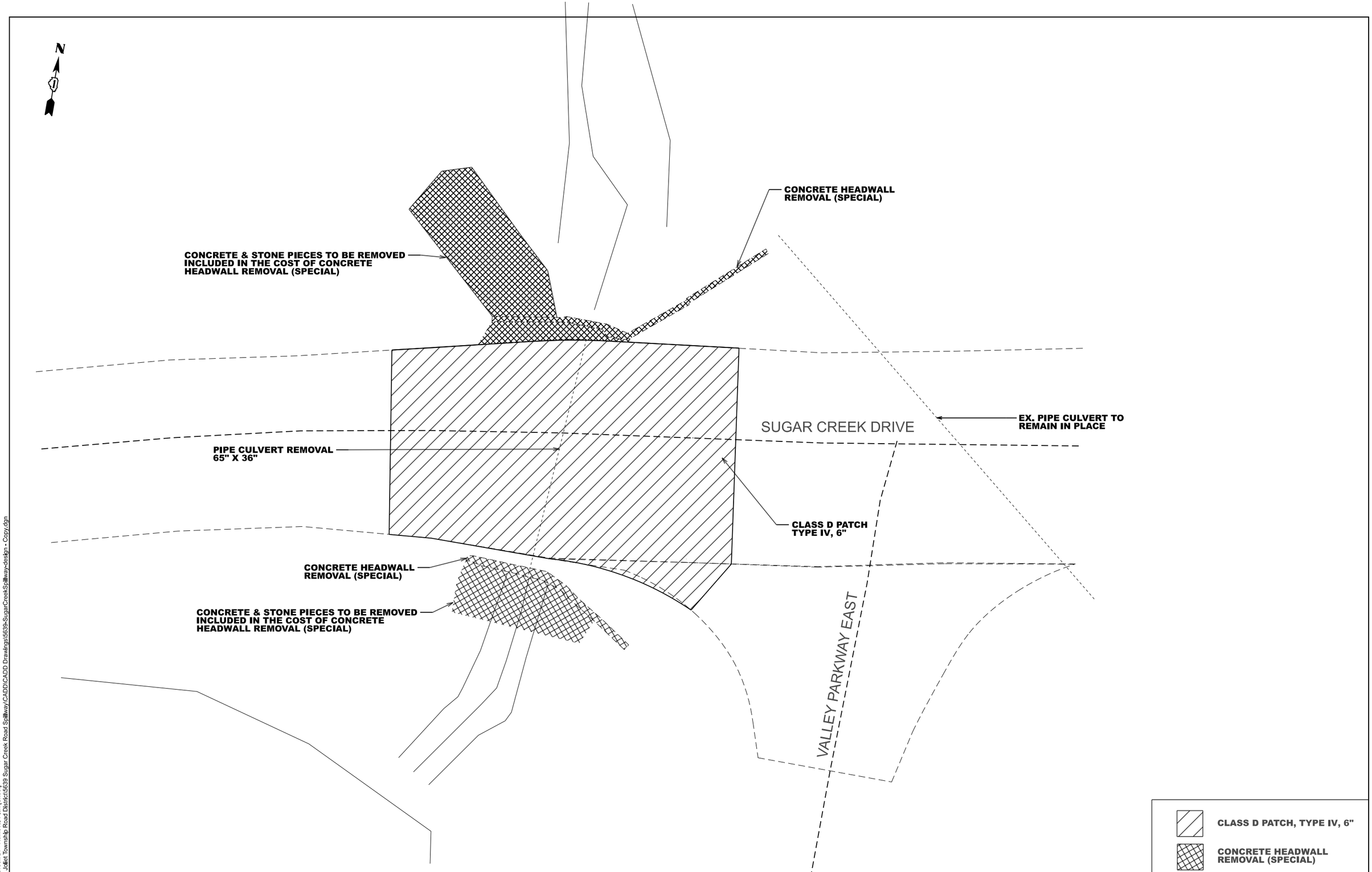

MODEL: Sugar Creek Dr - Removal-Plan [Sheet]
FILE NAME: V:\Joliet Township Road District\5639 Sugar Creek Road Spillway\CADD\CADD Drawings\5639-SugarCreekSpillway-design - Copy.dgn

USER NAME = estorm	DESIGNED -	REVISED -	JOLIET TOWNSHIP HIGHWAY DEPARTMENT
	DRAWN -	REVISED -	
	CHECKED -	REVISED -	
PLOT DATE = 7/15/2026	DATE -	REVISED -	

REMOVAL PLAN
SUGAR CREEK DRIVE

SCALE: 1"=5' | SHEET Unnamed Plan-1 - Roadway Plan-1 | SHEETS STA. 0+00.00 TO STA. 1+50.00

F.A. RTE.	SECTION	COUNTY	TOTAL SHEETS	SHEET NO.
			6	3
		CONTRACT NO.		
		ILLINOIS	FED. AID PROJECT	

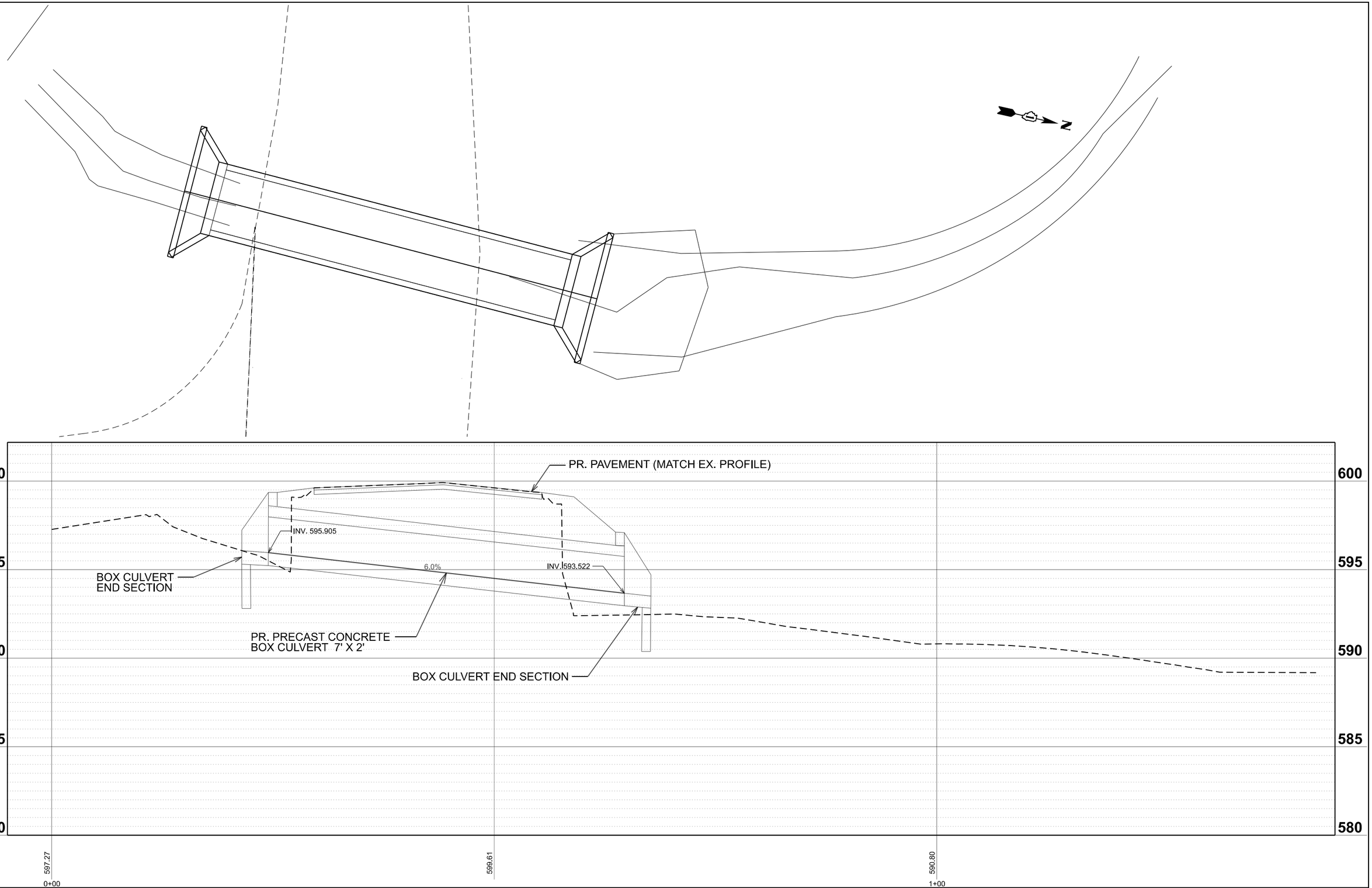

MODEL: Unnamed Plan-3 - Plan 1 [Sheet]
FILE NAME: V:\Joliet Township Road District\5639 Sugar Creek Road Spillway\CADD\CADD Drawings\5639-SugarCreekSpillway-design - Copy.dgn

USER NAME = estorm	DESIGNED -	REVISED -	
	DRAWN -	REVISED -	
	CHECKED -	REVISED -	
PLOT DATE = 7/15/2026	DATE -	REVISED -	

JOLIET TOWNSHIP
HIGHWAY DEPARTMENT

BOX CULVERT PLAN & PROFILE
SUGAR CREEK DRIVE

SCALE: 1"=5' | SHEET Plan 1 OF SHEETS | STA. -0+05.00 TO STA. 1+45.00

F.A. RTE.	SECTION	COUNTY	TOTAL SHEETS	SHEET NO.
			6	4

CONTRACT NO.

ILLINOIS | FED. AID PROJECT

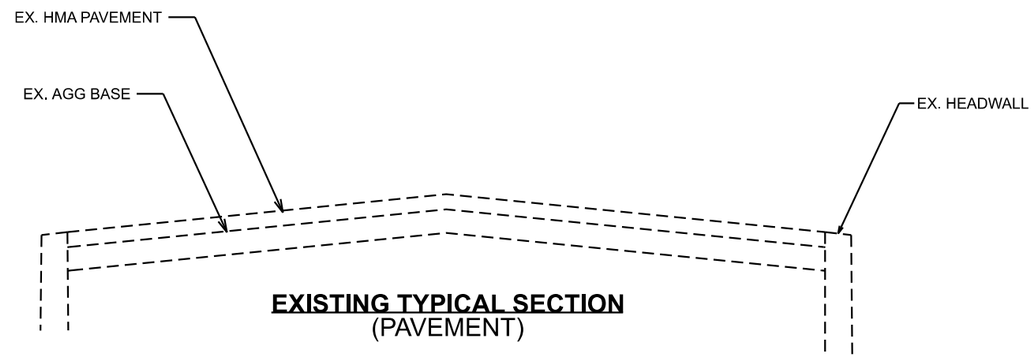

EXISTING TYPICAL SECTION
(PAVEMENT)

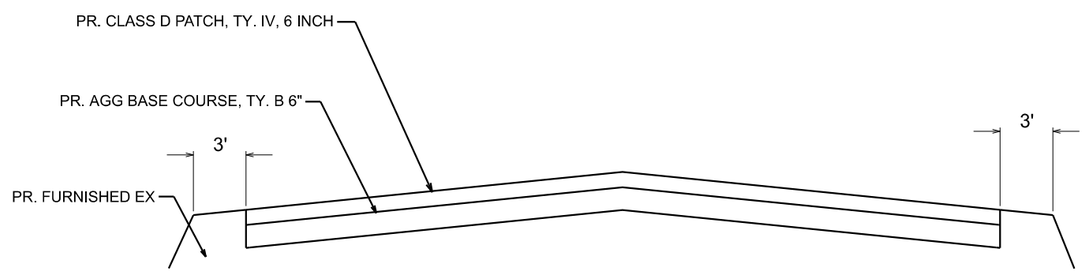

PROPOSED TYPICAL SECTION
(PAVEMENT)

MODEL: Sugar Creek Drive - Typical Section (Pavement)
FILE NAME: V:\Joliet Township Road Disirict\5639 Sugar Creek Road Spillway\CADD\CADD Sheets\5639-SugarCreekSpillway-typ.dgn

Hutchison Engineering, Inc.	USER NAME = estorm	DESIGNED -	REVISED -	JOLIET TOWNSHIP ROAD DISTRICT	TYPICAL SECTIONS (PAVEMENT)	F.A. RTE.	SECTION	COUNTY	TOTAL SHEETS / SHEET NO.
		DRAWN -	REVISED -						6 / 5
		CHECKED -	REVISED -			CONTRACT NO.			
	PLOT DATE = 6/16/2026	DATE -	REVISED -		SCALE: SHEET 000 OF 1 SHEETS STA. TO STA.	ILLINOIS	FED. AID PROJECT		

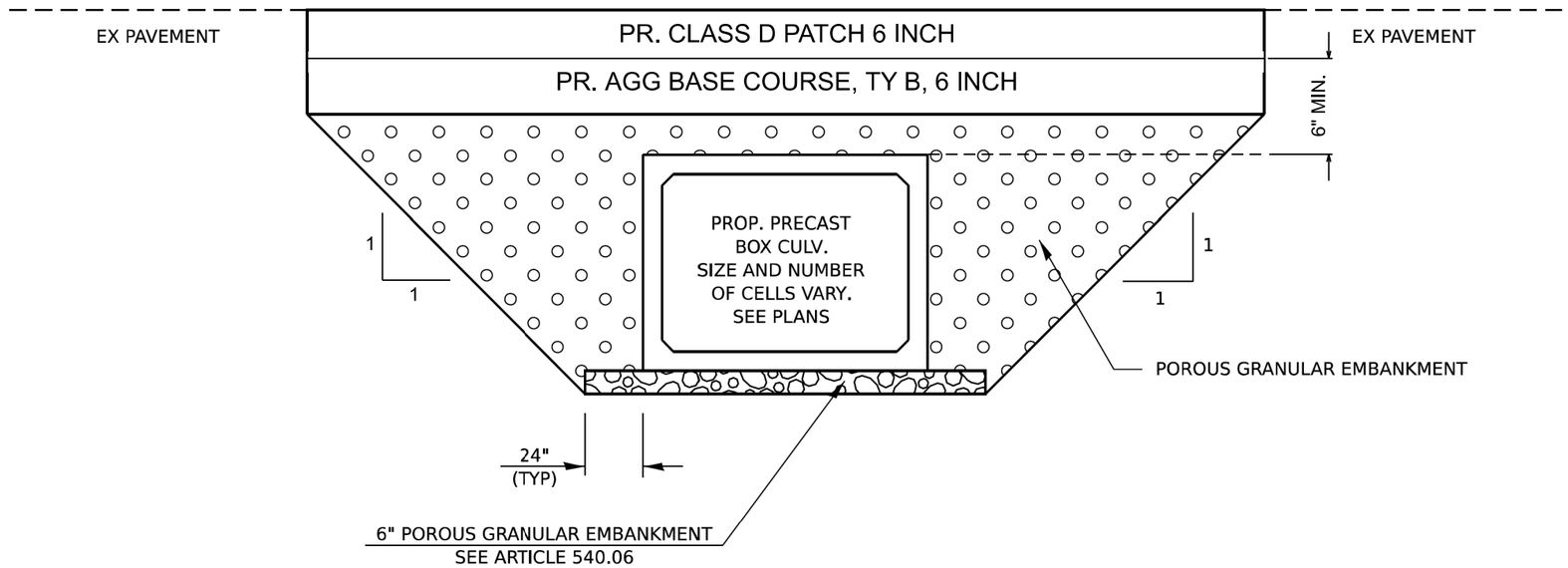

SECTION THROUGH PRECAST BOX CULVERT

BOX CULVERT BACKFILLING DETAIL

MODEL: Sugar Creek Drive - Typical Section (Pavement)
FILE NAME: V:\Joliet Township Road District\5639 Sugar Creek Road Spillway\CADD\CADD Sheets\5639-SugarCreekSpillway-culvert details.dgn

N

Hutchison Engineering, Inc.

USER NAME = estorm	DESIGNED -	REVISED -	JOLIET TOWNSHIP ROAD DISTRICT
	DRAWN -	REVISED -	
	CHECKED -	REVISED -	
PLOT DATE = 7/28/2026	DATE -	REVISED -	

BOX CULVERT BACKFILLING DETAIL

SCALE: | SHEET 000 OF 1 SHEETS | STA. | TO STA.

F.A. RTE.	SECTION	COUNTY	TOTAL SHEETS	SHEET NO.
			6	6
		CONTRACT NO.		
	ILLINOIS	FED. AID PROJECT		

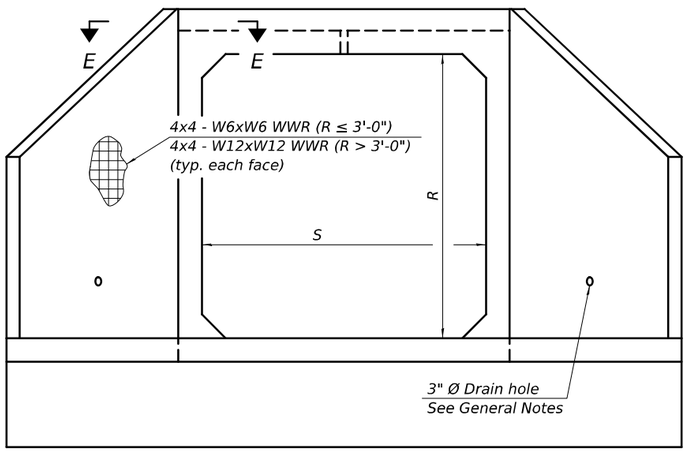

END VIEW

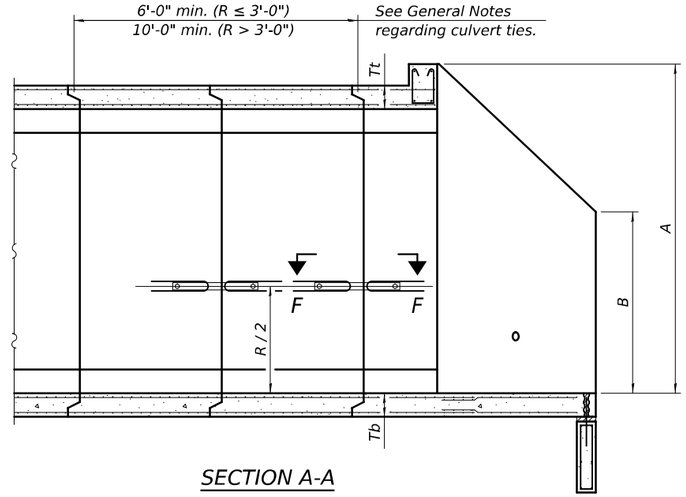

SECTION A-A

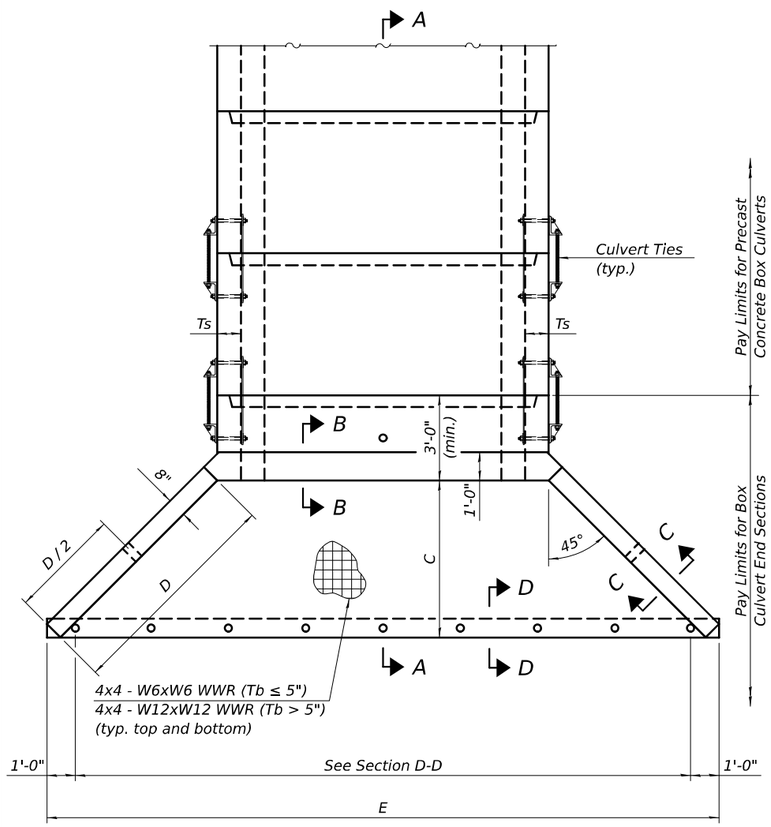

PLAN

GENERAL NOTES

Box Culvert End Sections shall be constructed according to the requirements of Section 540 of the Standard Specifications except as modified herein. End sections will be paid for at the contract unit price per each for Box Culvert End Sections.

The Contractor may furnish the end section as a single precast concrete piece or construct the end section in the field using cast-in-place (CIP) construction. For CIP construction, the bottom slab thickness shall be ncreased by 2" and the clear cover to the bottom mat of reinforcement shall be increased to 3".

Box section dimensions, materials, and reinforcement details for Box Culvert End Sections shall be according to the requirements for ASTM C 1577 as required for the design of the portion of the culvert within the limits of Precast Concrete Box Culverts except as modified herein.

The number of culvert ties shall be sufficient to engage the minimum length of culvert barrel shown within the pay limits for Precast Concrete Box Culverts and will be dependent upon the length of box culvert segments furnished by the Contractor. Culvert ties are not required for box culverts having a rise (R) less than or equal to 3 ft and a span (S) greater than or equal to 10 ft.

All costs associated with furnishing and installing or constructing the toewall and culvert ties will not be measured for payment but shall be included in the unit price for Box Culvert End Sections of the culvert number specified.

Shop drawings that detail slab thickness and reinforcement layout for the Box Culvert End Sections shall be provided to the Engineer for review and approval. Reinforcement bars not detailed herein shall be detailed with a clear distance at the end of the reinforcement not less than ½" nor more than 2". For the precast option, it shall be the Contractor's responsibility for determining a method of handling and a construction procedure shall be included on the shop drawings. The Contractor shall determine and detail in the shop drawings any necessary strengthening or stiffening provisions necessary to handle the precast segment. Any required modifications shall be at no extra charge.

The Contractor may use reinforcement bars in lieu of welded wire reinforcement (WWR). Reinforcement bars shall be limited to the sizes of #3 through #5 bars, a maximum spacing of the lesser of 8" or the member thickness, and shall result in an area of reinforcement equal to or greater than that provided by the WWR. Minimum lap lengths detailed herein are applicable to WWR and reinforcement bars.

Reinforcement (circumferential and longitudinal) in the culvert barrel portion of the end section being lapped with reinforcement from the wingwalls or bottom slab of the end section shall not be less than that required by ASTM C 1577 for the design fill height or the reinforcement detailed for the end section, whichever is greater.

One drain hole shall be provided in each wingwall for end sections of box culverts having an opening with a clear rise greater than 3 ft. The drain hole shall be located within the lower 1/3 of the clear rise of the box culvert and shall conform to the requirements of Article 503.11 of the Standard Specifications.

APRON END SECTION DIMENSIONS

Span (S)	Rise (R)	Tt	Tb	Ts	A	B	C	D	E	Concrete Cu. Yd.	Culvert Ties Required
3'-0"	2'-0"	7"	6"	4"	3'-4"	2'-2"	2'-10⅝"	4'-1"	10'-4⅝"	2.8	Yes
3'-0"	2'-0"	4"	4"	4"	3'-1"	2'-1"	2'-7⅞"	3'-9"	9'-11"	2.3	Yes
3'-0"	3'-0"	7"	6"	4"	4'-4"	2'-8"	3'-10⅝"	5'-6"	12-4⅝"	3.7	Yes
3'-0"	3'-0"	4"	4"	4"	4'-1"	2'-7"	3'-7⅞"	5'-2"	11'-11"	3.1	Yes
4'-0"	2'-0"	7.5"	6"	5"	3'-4½"	2'-2½"	2'-11⅜"	4'-2"	11'-8"	3.3	Yes
4'-0"	2'-0"	5"	5"	5"	3'-2"	2'-1"	2'-8½"	3'-10"	11'-2⅜"	2.8	Yes
4'-0"	3'-0"	7.5"	6"	5"	4'-4½"	2'-8½"	3'-11⅜"	5'-7"	13'-8⅛"	4.2	Yes
4'-0"	3'-0"	5"	5"	5"	4'-2"	2'-7"	3'-8½"	5'-3"	13'-2⅜"	3.7	Yes
4'-0"	4'-0"	7.5"	6"	5"	5'-4½"	3'-2½"	4'-11⅜"	7'-0"	15'-8⅛"	5.3	Yes
4'-0"	4'-0"	5"	5"	5"	5'-2"	3'-1"	4'-8⅝"	6'-8"	15'-2½"	4.7	Yes
5'-0"	2'-0"	8"	7"	6"	3'-5"	2'-3"	2'-11⅜"	4'-2"	12'-10"	3.9	Yes
5'-0"	2'-0"	6"	6"	6"	3'-3"	2'-2"	2'-10"	4'-0"	12'-7¼"	3.5	Yes
5'-0"	3'-0"	8"	7"	6"	4'-5"	2'-9"	3'-11⅜	5'-7"	14'-10⅛"	4.9	Yes
5'-0"	3'-0"	6"	6"	6"	4'-3"	2'-8"	3'-10"	5'-5"	14'-7¼"	4.5	Yes
5'-0"	4'-0"	8"	7"	6"	5'-5"	3'-3"	4'-11⅜"	7'-0"	16'-10⅛"	6.1	Yes
5'-0"	4'-0"	6"	6"	6"	5'-3"	3'-2"	4'-9¼"	6'-9"	16'-5⅞"	5.5	Yes
5'-0"	5'-0"	8"	7"	6"	6'-5"	3'-9"	5'-11⅜"	8'-5"	18'-10⅛"	7.4	Yes
5'-0"	5'-0"	6"	6"	6"	6'-3"	3'-8"	5'-9¼"	8'-2"	18'-5⅞"	6.8	Yes
6'-0"	2'-0"	8"	7"	7"	3'-5"	2'-3"	2'-11⅜"	4'-2"	14'-0"	4.3	Yes
6'-0"	2'-0"	7"	7"	7"	3'-4"	2'-2"	2'-10⅝"	4'-1"	13'-10⅝"	4.2	Yes
6'-0"	3'-0"	8"	7"	7"	4'-5"	2'-9"	3'-11⅜"	5'-7"	16'-0⅛"	5.4	Yes
6'-0"	3'-0"	7"	7"	7"	4'-4"	2'-8"	3'-10⅝"	5'-6"	15'-10⅝"	5.2	Yes
6'-0"	4'-0"	8"	7"	7"	5'-5"	3'-3"	4'-11⅜"	7'-0"	18'-0⅛"	6.5	Yes
6'-0"	4'-0"	7"	7"	7"	5'-4"	3'-2"	4'-10¾"	6'-11"	17'-10¾"	6.5	Yes
6'-0"	5'-0"	8"	7"	7"	6'-5"	3'-9"	5'-11⅜"	8'-5"	20'-0⅛"	8.0	Yes
6'-0"	5'-0"	7"	7"	7"	6'-4"	3'-8"	5'-10¾"	8'-4"	19'-10¾"	7.8	Yes
6'-0"	6'-0"	8"	7"	7"	7'-5"	4'-3"	6'-11½"	9'-10"	22'-0¼"	9.5	Yes
6'-0"	6'-0"	7"	7"	7"	7'-4"	4'-2"	6'-10¾"	9'-9"	21'-10¾"	9.3	Yes
7'-0"	2'-0"	8"	8"	8"	3'-5"	2'-3"	2'-11⅜"	4'-2"	15'-2"	4.9	Yes
7'-0"	3'-0"	8"	8"	8"	4'-5"	2'-9"	3'-11⅜"	5'-7"	17'-2⅛"	6.1	Yes
7'-0"	4'-0"	8"	8"	8"	5'-5"	3'-3"	4'-11⅜"	7'-0"	19'-2⅛"	7.4	Yes
7'-0"	5'-0"	8"	8"	8"	6'-5"	3'-9"	5'-11⅜"	8'-5"	21'-2⅛"	8.9	Yes
7'-0"	6'-0"	8"	8"	8"	7'-5"	4'-3"	6'-11½"	9'-10"	23'-2¼"	10.6	Yes
8'-0"	2'-0"	8"	8"	8"	3'-5"	2'-3"	2'-11⅜"	4'-2"	16'-2"	5.3	Yes
8'-0"	3'-0"	8"	8"	8"	4'-5"	2'-9"	3'-11⅜"	5'-7"	18'-2⅛"	6.5	Yes
8'-0"	4'-0"	8"	8"	8"	5'-5"	3'-3"	4'-11⅜"	7'-0"	20'-2⅛"	7.8	Yes
8'-0"	5'-0"	8"	8"	8"	6'-5"	3'-9"	5'-11⅜"	8'-5"	22'-2⅛"	9.3	Yes
8'-0"	6'-0"	8"	8"	8"	7'-5"	4'-3"	6'-11½"	9'-10"	24'-2¼"	11.0	Yes
9'-0"	2'-0"	9"	9"	9"	3'-6"	2'-3"	3'-0¾"	4'-4"	17'-6⅞"	6.2	Yes
9'-0"	3'-0"	9"	9"	9"	4'-6"	2'-9"	4'-0¾"	5'-9"	19'-6⅞"	7.5	Yes
9'-0"	4'-0"	9'	9"	9"	5'-6"	3'-3"	5'-0¾"	7'-2"	21'-6⅞"	9.0	Yes
9'-0"	5'-0"	9"	9"	9"	6'-6"	3'-9"	6'-0⅞"	8'-7"	23'-7"	10.6	Yes
9'-0"	6'-0"	9"	9"	9"	7'-6"	4'-3"	7'-0⅛"	9'-11"	25'-5⅝"	12.4	Yes
10'-0"	2'-0"	10"	10"	10"	3'-7"	2'-4"	3'-1½"	4'-5"	18'-10¼"	7.1	No
10'-0"	3'-0"	10"	10"	10"	4'-7"	2'-10"	4'-1½"	5'-10"	20'-10¼"	8.6	No
10'-0"	4'-0"	10"	10"	10"	5'-7"	3'-4"	5'-1½"	7'-3"	22'-10⅜"	10.2	Yes
10'-0"	5'-0"	10"	10"	10"	6'-7"	3'-10"	6'-1½"	8'-8"	24'-10⅜"	12.0	Yes
10'-0"	6'-0"	10"	10"	10"	7'-7"	4'-4"	7'-1½"	10'-1"	26'-10⅜"	13.9	Yes
11'-0"	2'-0"	11"	11"	11"	3'-8"	2'-4"	3'-2⅞"	4'-7"	20'-3⅛"	8.2	No
11'-0"	3'-0"	11"	11"	11"	4'-8"	2'-10"	4'-2⅞"	6'-0"	22'-3⅛"	9.8	No
11'-0"	4'-0"	11"	11"	11"	5'-8"	3'-4"	5'-2¼"	7'-4"	24'-1¾"	11.5	Yes
11'-0"	5'-0"	11"	11"	11"	6'-8"	3'-10"	6'-2¼"	8'-9"	26'-1¾"	13.3	Yes
11'-0"	6'-0"	11"	11"	11"	7'-8"	4'-4"	7'-2¼"	10'-2"	28'-1⅞"	15.5	Yes
12'-0"	2'-0"	12"	12"	12"	3'-9"	2'-5"	3'-3⅝"	4'-8"	21'-6½"	9.3	No
12'-0"	3'-0"	12"	12"	12"	4'-9"	2'-11"	4'-3⅝"	6'-1"	23'-6½"	11.1	No
12'-0"	4'-0"	12"	12"	12"	5'-9"	3'-5"	5'-3⅝"	7'-6"	25'-6⅝"	13.0	Yes
12'-0"	5'-0"	12"	12"	12"	6'-9"	3'-11"	6'-3⅝"	8'-11"	27'-6⅝"	14.1	Yes
12'-0"	6'-0"	12"	12"	12"	7'-9"	4'-5"	7'-3⅝"	10'-4"	29'-6⅝"	17.4	Yes

Note:
Two sets of apron end section dimensions are shown above for some box culvert sizes due to the top and bottom slabs having different thicknesses per ASTM C 1577 for design fill heights less than 2 ft.

(Sheet 1 of 2)

SCB-AES 5-15-2023

USER NAME =	DESIGNED -	REVISED -	STATE OF ILLINOIS DEPARTMENT OF TRANSPORTATION
	CHECKED -	REVISED -	
PLOT SCALE =	DRAWN -	REVISED -	
PLOT DATE =	CHECKED -	REVISED -	

PRECAST CONCRETE BOX CULVERT APRON END SECTION DETAILS - STRUCTURE NO.

SHEET OF SHEETS

F.A. RTE.	SECTION	COUNTY	TOTAL SHEETS	SHEET NO.

CONTRACT NO.

ILLINOIS FED. AID PROJECT

MODEL: SCB-AES (1 of 2)
FILE NAME: pw://ildot-pw.bentley.com:PWIDOT/Documents/IDOT Offices/Bureau of Bridges and Structures/Standards/Miscellaneous/Bridge Cell Libraries/CONNECT Version/Culvert/Culvert End Section Details.cel

3/18/2025 3:20:59 PM

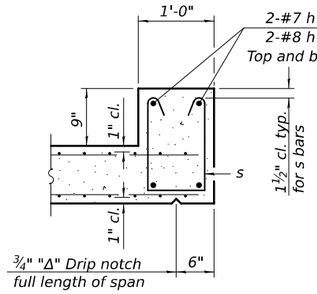

SECTION B-B
(Top slab at downstream end)

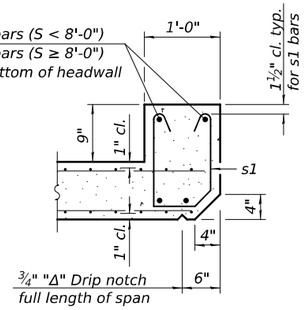

SECTION B-B
(Top slab at upstream end)

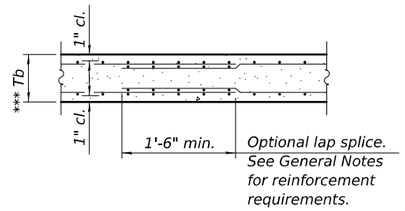

SECTION B-B
(Bottom Slab)

*** This dimension shall be increased by 2" for CIP construction.

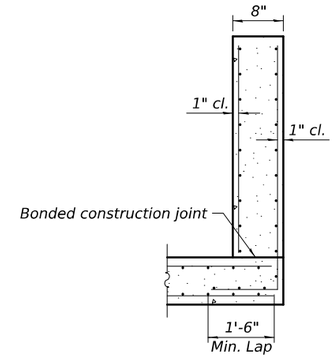

SECTION C-C

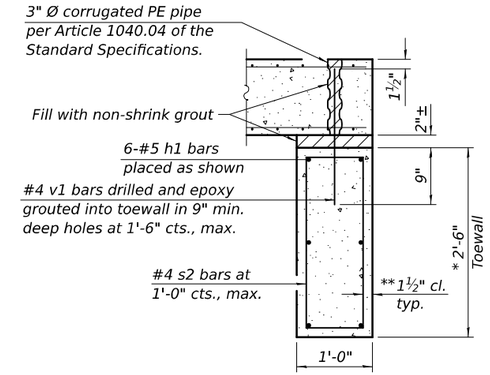

SECTION D-D

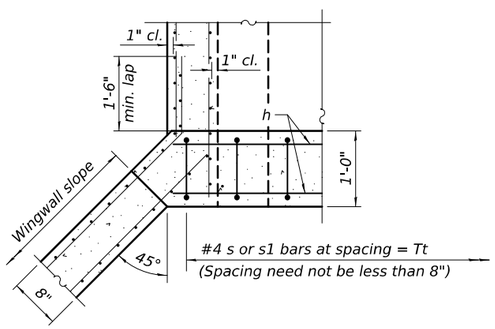

SECTION E-E

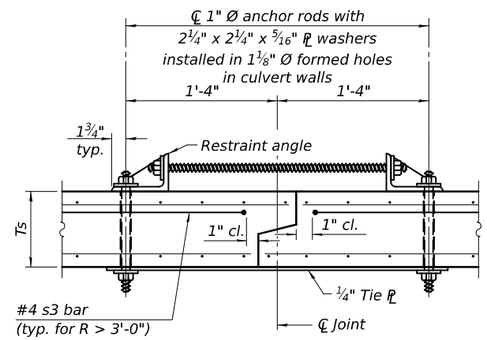

SECTION F-F
(Showing culvert tie details)

TOEWALL CONSTRUCTION SEQUENCE

1. Perform excavation and construct toewall.
2. Backfill accordingly and place bedding for precast box culvert end sections.
3. Set precast box culvert end section.
4. Drill and epoxy grout reinforcement in toewall in accordance with Section 584 of the Standard Specifications.
5. Pressure grout voids using non-shrink grout conforming to Section 1024 of the Standard Specifications.

* The Contractor may furnish a precast or cast-in-place toewall. The Contractor shall be responsible for the strength and stability of the precast toewall during handling. Additional lifting points may be required depending upon the length of the toewall or the Contractor may need to modify the design of the toewall for the proposed handling method.

** If soil conditions permit, the sides of the toewall may be poured directly against the soil. The clear cover on the sides of the toewall shall be increased to 3" by increasing the thickness of the toewall.

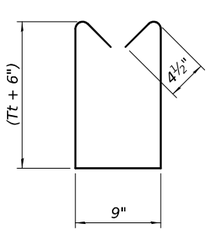

BAR s

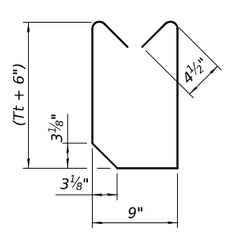

BAR s1

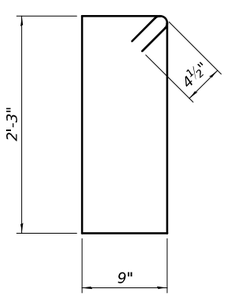

BAR s2

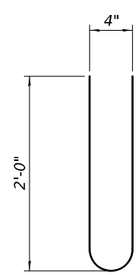

BAR s3

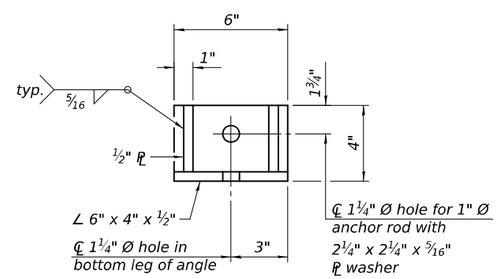

RESTRAINT ANGLE DETAIL

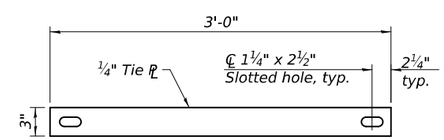

TIE PLATE DETAIL

Notes:

1" Ø anchor rods for the culvert ties shall conform to the requirements of ASTM F1554, Grade 105. Structural steel for the tie plate and restraint angle shall conform to the requirements of Article 1006.04 of the Standard Specifications. All components of the culvert tie detail shall be galvanized according to the requirements of AASHTO M 111 or M 232 as applicable. 2¼"x2¼"x5/16" plate washers shall be provided under each nut required for the anchor rods. Anchor rods connecting precast sections shall be brought to a snug tight condition followed by an additional ½ turn on one of the nuts for anchor rods installed in the walls. Match marks shall be provided on the bolt and nut to verify relative rotation between the bolt and the nut. Holes in the walls for the culvert tie assembly may be drilled using core bits in lieu of using formed holes.

SCB-AES 5-15-2023

(Sheet 2 of 2)

USER NAME =	DESIGNED -	REVISED -	STATE OF ILLINOIS DEPARTMENT OF TRANSPORTATION
	CHECKED -	REVISED -	
PLOT SCALE =	DRAWN -	REVISED -	
PLOT DATE =	CHECKED -	REVISED -	

PRECAST CONCRETE BOX CULVERT APRON END SECTION DETAILS - STRUCTURE NO.

SHEET OF SHEETS

F.A. RTE.	SECTION	COUNTY	TOTAL SHEETS	SHEET NO.
		CONTRACT NO.		
	ILLINOIS	FED. AID PROJECT		

MODEL: SCB-AES (2 of 2)
FILE NAME: pw://ildot-pw.bentley.com:PWIDOT/Documents/IDOT Offices/Bureau of Bridges and Structures/Standards/Miscellaneous/Bridge Cell Libraries/CONNECT Version/Culvert/Culvert End Section Details.cel

3/18/2025 3:20:59 PM

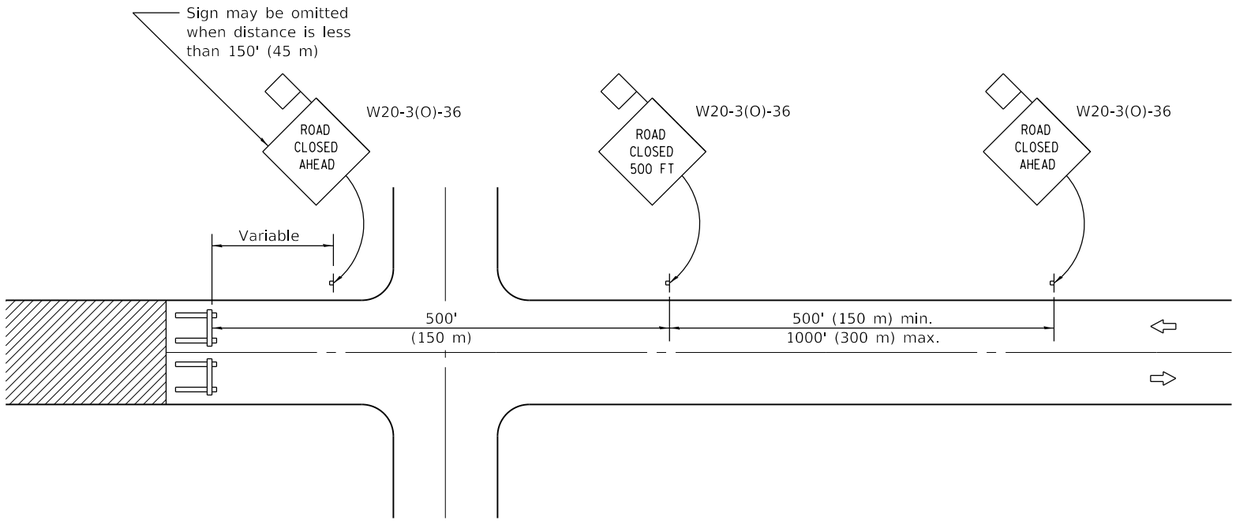

CONDITION I

When distance from closure to crossroad is less than 1500' (450 m)

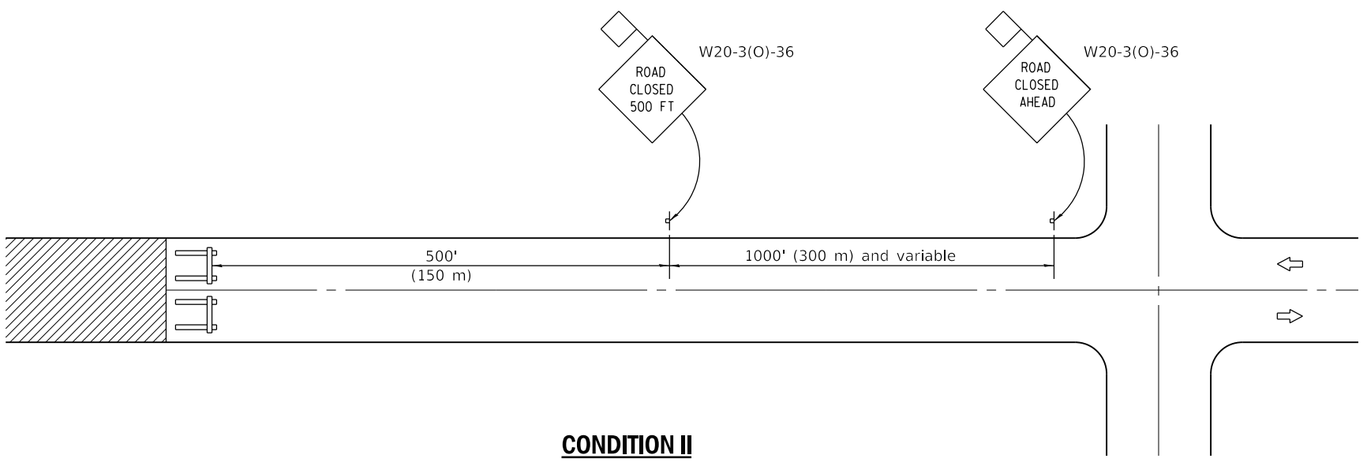

CONDITION II

When distance from closure to crossroad is greater than 1500' (450 m)

SYMBOLS

Work area

Type III Barricade

Sign with 18x18 (450x450) min. orange flag attached

GENERAL NOTES

Type III Barricades and R11-2-4830 signs shall be positioned as shown in "Road Closed To All Traffic" detail on Highway Standard 701901.

Two Type A Low Intensity Flashing Lights shall be used on each approach in advance of the work area during hours of darkness. One light shall be installed above the barricades and the other above the first advance warning sign.

All warning signs shall have minimum dimensions of 36 x 36 (900 x 900) and have a black legend on an orange reflectorized background.

When fluorescent signs are used, orange flags are not required.

Longitudinal dimensions may be adjusted to fit field conditions.

When the distance between the barricade and the intersection is between 1500' (450 m) and 2000' (600 m), the advance sign shall be placed at the intersection. When the distance between the barricade and the intersection is over 2000' (600 m), an additional sign shall be placed at the intersection. The additional sign shall give the distance to the barricade in miles or fractions of a mile.

All dimensions are in inches (millimeters) unless otherwise shown.

Illinois Department of Transportation

PASSED January 1, 2012

ENGINEER OF LOCAL ROADS AND STREETS

APPROVED January 1, 2012

ENGINEER OF DESIGN AND ENVIRONMENT

ISSUED 1-1-97

DATE	REVISIONS
1-1-12	Omitted two notes from
	GENERAL NOTES.
1-1-09	Switched units to
	English (metric).

TYPICAL APPLICATION OF TRAFFIC CONTROL DEVICES FOR CONSTRUCTION ON RURAL LOCAL HIGHWAYS

STANDARD B.L.R. 21-9

DAYTIME USE

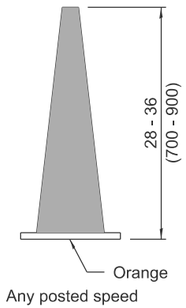

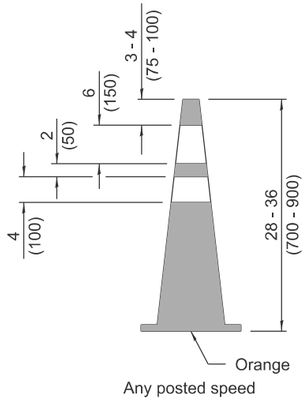

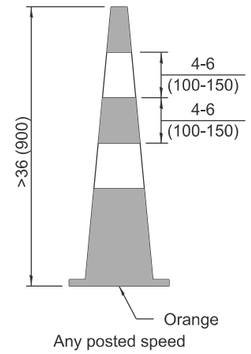

DAY OR NIGHTTIME USE

CONES

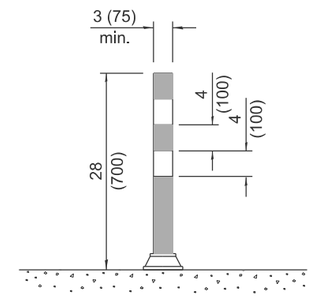

TUBULAR MARKER

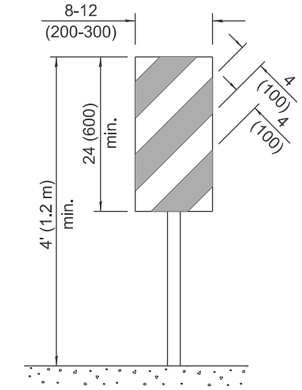

VERTICAL PANEL
POST MOUNTED

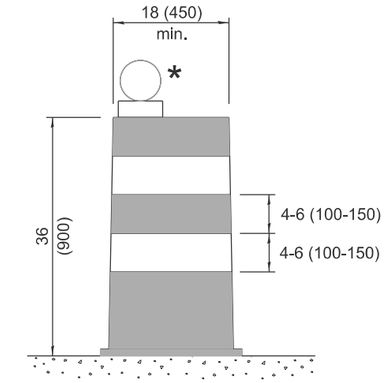

DRUM

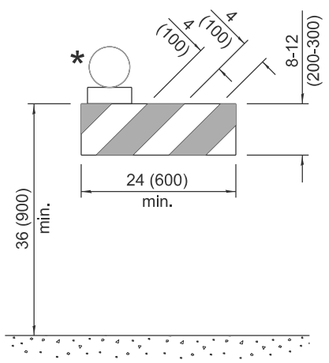

TYPE I BARRICADE

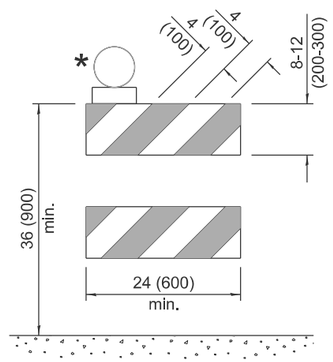

TYPE II BARRICADE

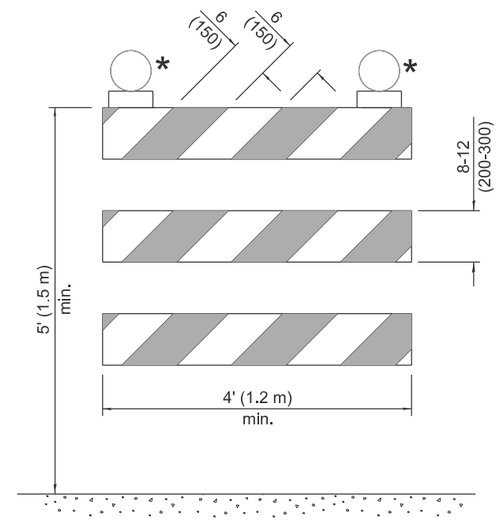

TYPE III BARRICADE

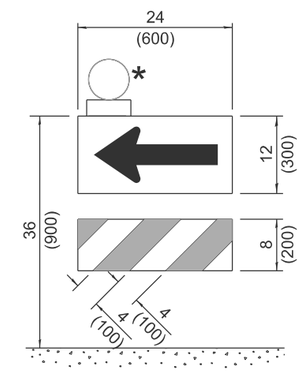

DIRECTION INDICATOR BARRICADE

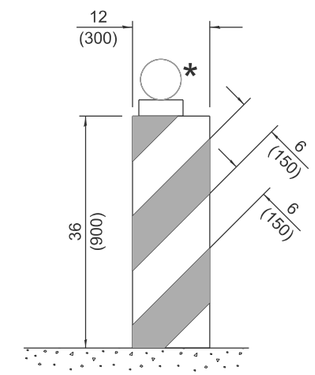

VERTICAL BARRICADE

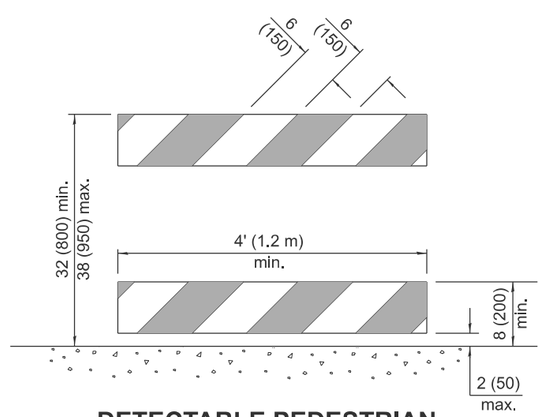

DETECTABLE PEDESTRIAN CHANNELIZING BARRICADE

* Warning lights (if required)

GENERAL NOTES

All heights shown shall be measured above the pavement surface.

All dimensions are in inches (millimeters) unless otherwise shown.

Illinois Department of Transportation

APPROVED January 1, 2026
ENGINEER OF SAFETY PROG. AND ENGINEERING

APPROVED January 1, 2026
ENGINEER OF DESIGN AND ENVIRONMENT

ISSUED 1-1-13

DATE	REVISIONS
1-1-26	Updated Detectable Pedstrian
	Channelizing Barricade (sht. 1) &
	Temporary Rumble Strips
	details (sht. 3)
1-1-25	Updated Temporary Rumble
	Strip Detail (sht. 3).

TRAFFIC CONTROL DEVICES

(Sheet 1 of 3)

STANDARD 701901-11

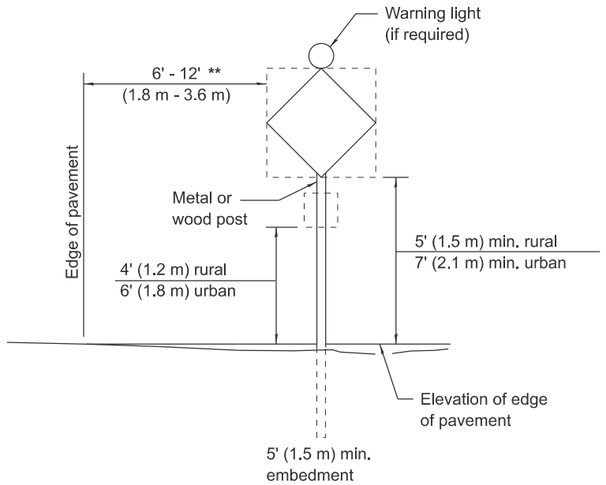

POST MOUNTED SIGNS

** When curb or paved shoulder are present this dimension shall be 24 (600) to the face of curb or 6' (1.8 m) to the outside edge of the paved shoulder.

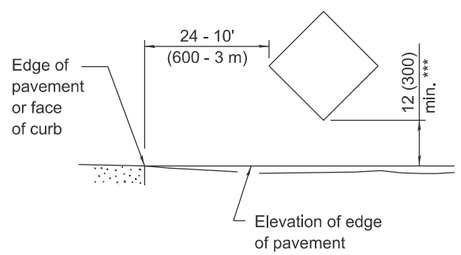

SIGNS ON TEMPORARY SUPPORTS

*** When work operations exceed four days, this dimension shall be 5' (1.5 m) min. If located behind other devices, the height shall be sufficient to be seen completely above the devices.

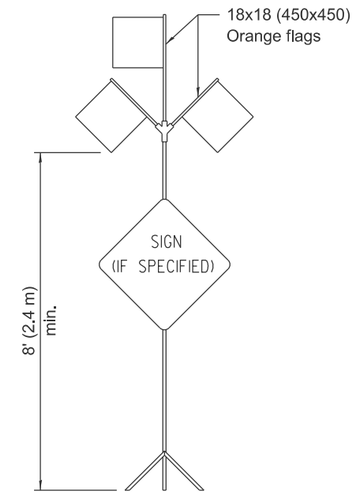

HIGH LEVEL WARNING DEVICE

G20-I104(0)-6036 G20-I105(0)-6024

This signing is required for all projects 2 miles (3200 m) or more in length.

ROAD CONSTRUCTION NEXT X MILES sign shall be placed 500' (150 m) in advance of project limits.

END CONSTRUCTION sign shall be erected at the end of the job unless another job is within 2 miles (3200 m).

Dual sign displays shall be utilized on multi-lane highways.

WORK LIMIT SIGNING

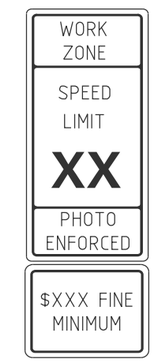

W21-III5(0)-3618

R2-1-3648

R10-I108p-3618 ****

R2-I106p-3618

Sign assembly as shown on Standards or as allowed by District Operations.

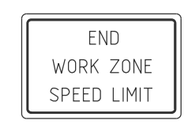

G20-I103-6036

This sign shall be used when the above sign assembly is used.

HIGHWAY CONSTRUCTION SPEED ZONE SIGNS

**** R10-I108p shall only be used along roadways under the juristiction of the State.

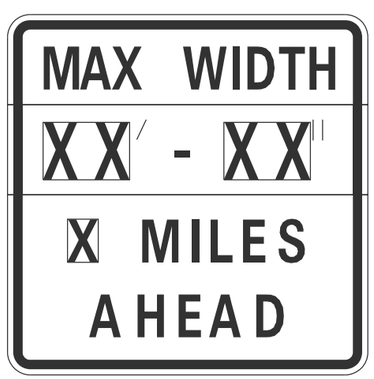

W12-I103-4848

WIDTH RESTRICTION SIGN

XX'-XX" width and X miles are variable.

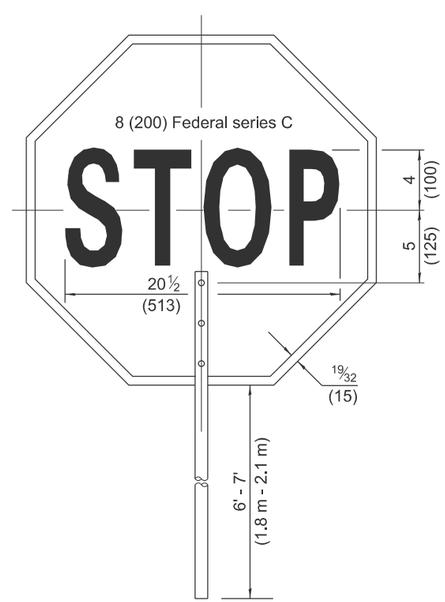

FRONT SIDE

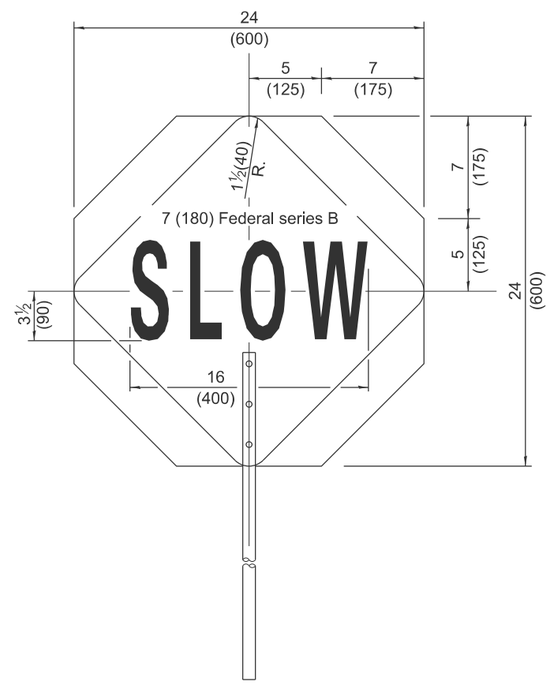

REVERSE SIDE

FLAGGER TRAFFIC CONTROL SIGN

Illinois Department of Transportation

APPROVED January 1, 2026
ENGINEER OF SAFETY PROG. AND ENGINEERING

APPROVED January 1, 2026
ENGINEER OF DESIGN AND ENVIRONMENT

ISSUED 1-1-13

TRAFFIC CONTROL DEVICES

(Sheet 2 of 3)

STANDARD 701901-11

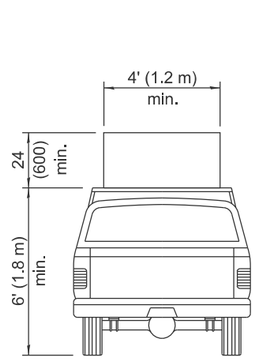

TYPE A
ROOF
MOUNTED

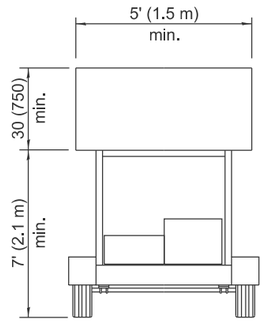

TYPE B
ROOF OR TRAILER
MOUNTED

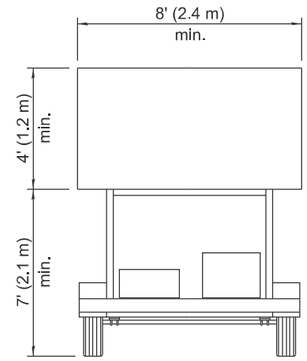

TYPE C
TRAILER
MOUNTED

ARROW BOARDS

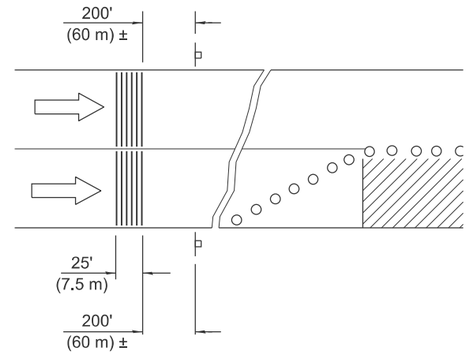

MULTI-LANE HIGHWAYS

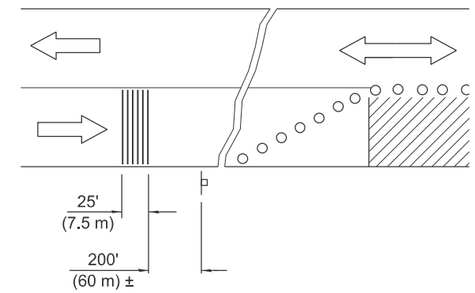

TWO-LANE HIGHWAYS

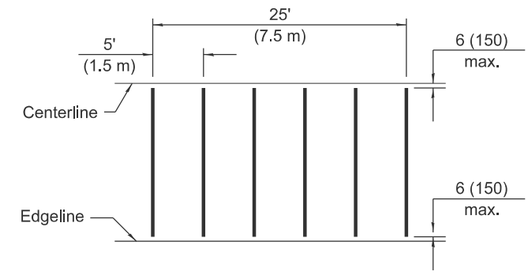

TYPICAL INSTALLATION

TEMPORARY RUMBLE STRIPS

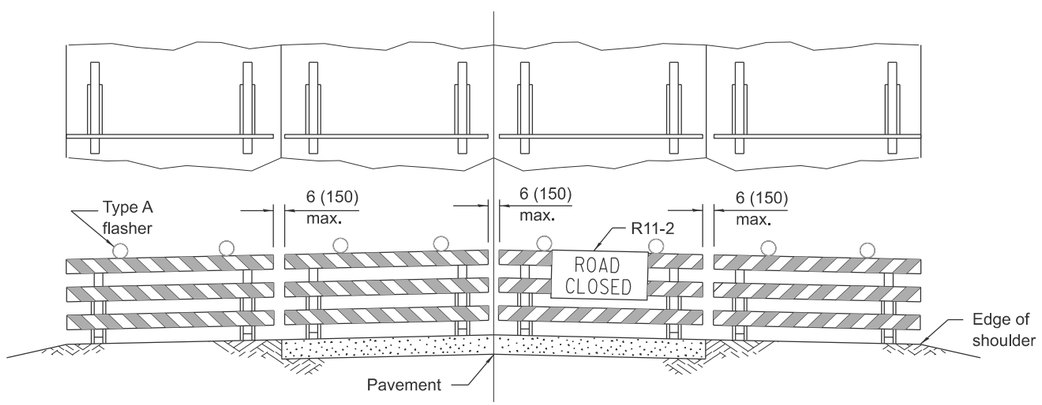

ROAD CLOSED TO ALL TRAFFIC

Reflectorized striping may be omitted on the back side of the barricades.

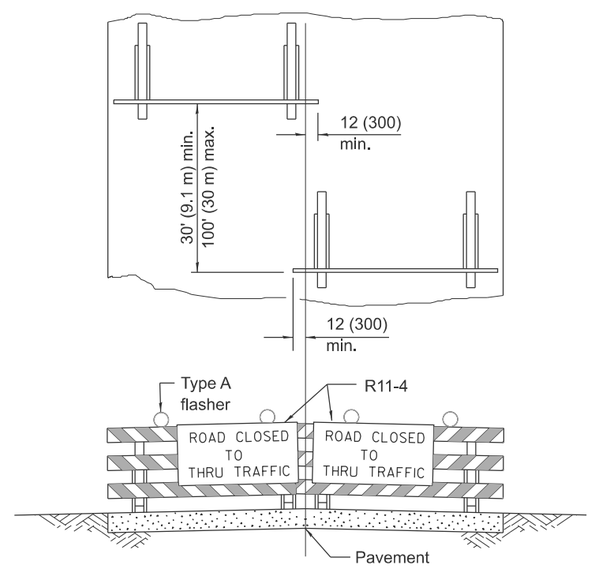

ROAD CLOSED TO THRU TRAFFIC

Reflectorized striping shall appear on both sides of the barricades.

TYPICAL APPLICATIONS OF TYPE III BARRICADES CLOSING A ROAD

If a Type III barricade with an attached sign panel which meets NCHRP 350 or MASH is not available, the sign may be mounted on an NCHRP 350 or MASH temporary sign support directly in front of the barricade.

Illinois Department of Transportation

APPROVED January 1, 2026
ENGINEER OF SAFETY PROG. AND ENGINEERING

APPROVED January 1, 2026
ENGINEER OF DESIGN AND ENVIRONMENT

ISSUED 1-1-13

TRAFFIC CONTROL DEVICES

(Sheet 3 of 3)

STANDARD 701901-11

Will County Prevailing Wage Rates posted on 7/15/2026

						Overtime										
Trade Title	Rg	Type	C	Base	Foreman	M-F	Sa	Su	Hol	H/W	Pension	Vac	Trng	Other Ins	Add OT 1.5x owed	Add OT 2.0x owed
ASBESTOS ABT-GEN	All	ALL		53.00	54.00	1.5	1.5	2.0	2.0	19.86	18.34	0.00	0.91		0.00	0.00
ASBESTOS ABT-MEC	All	BLD		43.52	47.00	1.5	1.5	2.0	2.0	17.84	16.75	0.00	1.01		3.42	6.84
BOILERMAKER	All	BLD		62.06	67.64	2.0	2.0	2.0	2.0	7.07	27.81	0.00	3.69	2.72	0.00	40.50
BRICK MASON	All	BLD		54.81	60.29	1.5	1.5	2.0	2.0	14.74	25.51	0.00	1.59	0.00	13.05	17.40
CARPENTER	All	ALL		58.51	64.36	2.0	2.0	2.0	2.0	14.49	31.73	2.56	1.04		0.00	0.00
CEMENT MASON	All	ALL		48.85	50.85	2.0	1.5	2.0	2.0	13.37	33.80	0.00	0.80	0.00	0.00	0.00
CERAMIC TILE FINISHER	All	BLD		51.09	51.09	1.5	1.5	2.0	2.0	14.00	18.32	0.00	1.41	0.00	17.32	23.08
CERAMIC TILE LAYER	All	BLD		59.44	64.44	1.5	1.5	2.0	2.0	14.00	22.43	0.00	1.54	0.00	23.67	31.56
COMMUNICATION TECHNICIAN	All	BLD		48.00	52.80	1.5	1.5	2.0	2.0	18.59	19.52	0.00	0.78	2.42	0.00	0.00
CONCRETE SPECIALIST	All	BLD		53.56	60.18	1.5	1.5	2.0	2.0	14.74	26.81	0.00	1.59	0.00	15.00	20.00
CONCRETE SPECIALIST WELDER	All	BLD		56.24	60.18	1.5	1.5	2.0	2.0	14.74	26.81	0.00	1.59	0.00	15.00	20.00
ELECTRIC PWR EQMT OP	All	ALL		67.18	73.73	1.5	1.5	2.0	2.0	12.99	23.34	0.00	3.69	0.00	0.00	0.00
ELECTRIC PWR GRNDMAN	All	ALL		52.40	73.73	1.5	1.5	2.0	2.0	10.13	18.20	0.00	2.87	0.00	0.00	0.00
ELECTRIC PWR LINEMAN	All	ALL		67.18	73.73	1.5	1.5	2.0	2.0	12.99	23.34	0.00	3.69	0.00	0.00	0.00
ELECTRICIAN	All	BLD		61.00	66.49	1.5	1.5	2.0	2.0	18.98	23.33	0.00	1.45	5.50	0.00	0.00
ELEVATOR CONSTRUCTOR	All	BLD		73.65	82.86	2.0	2.0	2.0	2.0	16.37	21.76	5.89	0.80		0.00	0.00
GLAZIER	All	BLD		55.35	56.85	1.5	2.0	2.0	2.0	16.54	27.36	0.00	2.35	0.00	0.00	0.00
HEAT/FROST INSULATOR	All	BLD		58.02	61.50	1.5	1.5	2.0	2.0	17.84	20.05	0.00	1.01		5.07	10.14
IRON WORKER	All	ALL		54.50	59.95	2.0	2.0	2.0	2.0	15.16	31.82	0.00	1.35	0.00	0.00	0.00
LABORER	All	ALL		53.00	53.75	1.5	1.5	2.0	2.0	19.86	18.34	0.00	0.91		0.00	0.00
LATHER	All	ALL		58.51	64.36	2.0	2.0	2.0	2.0	14.49	31.73	2.56	1.04		0.00	0.00
MACHINIST	All	BLD		61.89	65.89	1.5	1.5	2.0	2.0	14.43	9.95	1.85	1.47		0.00	0.00
MARBLE FINISHER	All	ALL		41.74	56.44	1.5	1.5	2.0	2.0	14.74	22.81	0.00	1.01	0.00	9.00	12.00
MARBLE SETTER	All	BLD		53.75	59.13	1.5	1.5	2.0	2.0	14.74	24.78	0.00	1.27	0.00	11.96	15.94
MATERIAL TESTER I	All	ALL		43.00		1.5	1.5	2.0	2.0	19.86	18.34	0.00	0.91		0.00	0.00
MATERIALS TESTER II	All	ALL		48.00		1.5	1.5	2.0	2.0	19.86	18.34	0.00	0.91		0.00	0.00

Will County Prevailing Wage Rates posted on 7/15/2026

MILLWRIGHT	All	ALL		58.51	64.36	2.0	2.0	2.0	2.0	14.49	31.73	2.56	1.04		0.00	0.00
OPERATING ENGINEER	All	BLD	1	68.80	72.80	2.0	2.0	2.0	2.0	25.95	22.30	2.00	2.80	0.00	0.00	0.00
OPERATING ENGINEER	All	BLD	2	67.50	72.80	2.0	2.0	2.0	2.0	25.95	22.30	2.00	2.80	0.00	0.00	0.00
OPERATING ENGINEER	All	BLD	3	64.95	72.80	2.0	2.0	2.0	2.0	25.95	22.30	2.00	2.80	0.00	0.00	0.00
OPERATING ENGINEER	All	BLD	4	63.20	72.80	2.0	2.0	2.0	2.0	25.95	22.30	2.00	2.80	0.00	0.00	0.00
OPERATING ENGINEER	All	BLD	5	72.55	72.80	2.0	2.0	2.0	2.0	25.95	22.30	2.00	2.80	0.00	0.00	0.00
OPERATING ENGINEER	All	BLD	6	69.80	72.80	2.0	2.0	2.0	2.0	25.95	22.30	2.00	2.80	0.00	0.00	0.00
OPERATING ENGINEER	All	BLD	7	71.80	72.80	2.0	2.0	2.0	2.0	25.95	22.30	2.00	2.80	0.00	0.00	0.00
OPERATING ENGINEER	All	FLT	1	78.55	78.55	1.5	1.5	2.0	2.0	25.95	22.30	2.00	2.90	0.00	0.00	0.00
OPERATING ENGINEER	All	FLT	2	77.05	78.55	1.5	1.5	2.0	2.0	25.95	22.30	2.00	2.90		0.00	0.00
OPERATING ENGINEER	All	FLT	3	72.55	78.55	1.5	1.5	2.0	2.0	25.95	22.30	2.00	2.90	0.00	0.00	0.00
OPERATING ENGINEER	All	FLT	4	68.05	78.55	1.5	1.5	2.0	2.0	25.95	22.30	2.00	2.90	0.00	0.00	0.00
OPERATING ENGINEER	All	FLT	5	80.05	78.55	1.5	1.5	2.0	2.0	25.95	22.30	2.00	2.90	0.00	0.00	0.00
OPERATING ENGINEER	All	FLT	6	68.05	78.55	1.5	1.5	2.0	2.0	25.95	22.30	2.00	2.90	0.00	0.00	0.00
OPERATING ENGINEER	All	HWY	1	67.00	71.00	1.5	1.5	2.0	2.0	25.95	22.30	2.00	2.80	0.00	0.00	0.00
OPERATING ENGINEER	All	HWY	2	66.45	71.00	1.5	1.5	2.0	2.0	25.95	22.30	2.00	2.80	0.00	0.00	0.00
OPERATING ENGINEER	All	HWY	3	64.40	71.00	1.5	1.5	2.0	2.0	25.95	22.30	2.00	2.80	0.00	0.00	0.00
OPERATING ENGINEER	All	HWY	4	63.00	71.00	1.5	1.5	2.0	2.0	25.95	22.30	2.00	2.80	0.00	0.00	0.00
OPERATING ENGINEER	All	HWY	5	61.80	71.00	1.5	1.5	2.0	2.0	25.95	22.30	2.00	2.80	0.00	0.00	0.00
OPERATING ENGINEER	All	HWY	6	70.00	71.00	1.5	1.5	2.0	2.0	25.95	22.30	2.00	2.80	0.00	0.00	0.00
OPERATING ENGINEER	All	HWY	7	68.00	71.00	1.5	1.5	2.0	2.0	25.95	22.30	2.00	2.80	0.00	0.00	0.00
PAINTER	All	ALL		56.30	63.34	1.5	1.5	1.5	2.0	16.86	18.24	0.00	1.86	0.00	0.00	0.00
PAINTER - SIGNS	All	BLD		48.16	54.11	1.5	1.5	2.0	2.0	8.20	16.81	0.00	0.00	0.00	0.00	0.00
PILEDRIVER	All	ALL		58.51	64.36	2.0	2.0	2.0	2.0	14.49	31.73	2.56	1.04		0.00	0.00
PIPEFITTER	All	BLD		59.50	62.50	1.5	1.5	2.0	2.0	16.00	23.85	0.00	2.87	0.00	0.00	0.00
PLASTERER	All	BLD		54.98	58.28	1.5	1.5	2.0	2.0	18.50	22.10	0.00	1.25		0.00	0.00
PLUMBER	All	BLD		62.00	65.70	1.5	1.5	2.0	2.0	20.85	18.00	0.00	2.17		0.00	0.00
ROOFER	All	BLD		53.75	58.75	1.5	1.5	2.0	2.0	12.95	18.19	0.00	1.14	0.00	0.00	0.00
SHEETMETAL WORKER	All	BLD		60.89	65.76	1.5	1.5	2.0	2.0	18.91	19.90	0.00	1.82	2.72	0.00	0.00
SPRINKLER FITTER	All	BLD		63.20	65.95	1.5	1.5	2.0	2.0	15.45	19.95	0.00	1.15	0.00	0.00	0.00

Will County Prevailing Wage Rates posted on 7/15/2026

STONE MASON	All	BLD		54.81	60.29	1.5	1.5	2.0	2.0	14.74	25.51	0.00	1.59	0.00	13.05	17.40
SURVEY WORKER	All	BLD		60.00	61.00	1.5	1.5	2.0	2.0	20.50	14.95	0.00	1.59		0.00	0.00
SURVEY WORKER	All	HWY		60.00	61.00	2.0	2.0	1.5	1.5	20.50	14.95	0.00	1.59		0.00	0.00
TERRAZZO FINISHER	All	BLD		53.44	53.44	1.5	1.5	2.0	2.0	14.00	19.59	0.00	1.14	0.00	13.89	18.52
TERRAZZO MECHANIC	All	BLD		57.35	60.85	1.5	1.5	2.0	2.0	14.00	20.97	0.00	1.50	0.00	14.63	19.50
TRAFFIC SAFETY WORKER I	All	HWY		44.65	46.65	1.5	1.5	2.0	2.0	11.00	10.33	0.00	1.05	0.00	0.00	0.00
TRAFFIC SAFETY WORKER II	ALL	HWY		45.65	47.65	1.5	1.5	2.0	2.0	11.00	10.33	0.00	1.05	0.00	0.00	0.00
TRUCK DRIVER	All	ALL	1	50.74	51.29	1.5	1.5	2.0	2.0	12.65	14.90	0.00	0.35	0.00	0.00	0.00
TRUCK DRIVER	All	ALL	2	50.89	51.29	1.5	1.5	2.0	2.0	12.65	14.90	0.00	0.35	0.00	0.00	0.00
TRUCK DRIVER	All	ALL	3	51.09	51.29	1.5	1.5	2.0	2.0	12.65	14.90	0.00	0.35	0.00	0.00	0.00
TRUCK DRIVER	All	ALL	4	51.29	51.29	1.5	1.5	2.0	2.0	12.65	14.90	0.00	0.35	0.00	0.00	0.00
TUCKPOINTER	All	BLD		53.53	54.53	1.5	1.5	2.0	2.0	12.05	23.73	0.00	1.48	0.00	0.00	0.00

Legend
Rg Region
Type Trade Type - All,Highway,Building,Floating,Oil & Chip,Rivers
C Class
Base Base Wage Rate
OT M-F Unless otherwise noted, OT pay is required for any hour greater than 8 worked each day, Mon through Fri. The number listed is the multiple of the base wage.
OT Sa Overtime pay required for every hour worked on Saturdays
OT Su Overtime pay required for every hour worked on Sundays
OT Hol Overtime pay required for every hour worked on Holidays
H/W Health/Welfare benefit
Vac Vacation
Trng Training
Other Ins Employer hourly cost for any other type(s) of insurance provided for benefit of worker.

Explanations WILL COUNTY

The following list is considered as those days for which holiday rates of wages for work performed apply: New Years Day, Memorial Day, Fourth of July, Labor Day, Thanksgiving Day, Christmas Day and Veterans Day in some classifications/counties. Generally, any of these holidays which fall on a Sunday is celebrated on the following Monday. This then makes work performed on that Monday payable at the appropriate overtime rate for holiday pay. Common practice in a given local may alter certain days of celebration. If in doubt, please check with IDOL.

Will County Prevailing Wage Rates posted on 7/15/2026

EXPLANATION OF CLASSES

ASBESTOS - GENERAL - removal of asbestos material/mold and hazardous materials from any place in a building, including mechanical systems where those mechanical systems are to be removed. This includes the removal of asbestos materials/mold and hazardous materials from ductwork or pipes in a building when the building is to be demolished at the time or at some close future date.

ASBESTOS - MECHANICAL - removal of asbestos material from mechanical systems, such as pipes, ducts, and boilers, where the mechanical systems are to remain.

CERAMIC TILE FINISHER

The grouting, cleaning, and polishing of all classes of tile, whether for interior or exterior purposes, all burned, glazed or unglazed products; all composition materials, granite tiles, warning detectable tiles, cement tiles, epoxy composite materials, pavers, glass, mosaics, fiberglass, and all substitute materials, for tile made in tile-like units; all mixtures in tile like form of cement, metals, and other materials that are for and intended for use as a finished floor surface, stair treads, promenade roofs, walks, walls, ceilings, swimming pools, and all other places where tile is to form a finished interior or exterior. The mixing of all setting mortars including but not limited to thin-set mortars, epoxies, wall mud, and any other sand and cement mixtures or adhesives when used in the preparation, installation, repair, or maintenance of tile and/or similar materials. The handling and unloading of all sand, cement, lime, tile, fixtures, equipment, adhesives, or any other materials to be used in the preparation, installation, repair, or maintenance of tile and/or similar materials. Ceramic Tile Finishers shall fill all joints and voids regardless of method on all tile work, particularly and especially after installation of said tile work. Application of any and all protective coverings to all types of tile installations including, but not be limited to, all soap compounds, paper products, tapes, and all polyethylene coverings, plywood, masonite, cardboard, and any new type of products that may be used to protect tile installations, Blastrac equipment, and all floor scarifying equipment used in preparing floors to receive tile. The clean up and removal of all waste and materials. All demolition of existing tile floors and walls to be re-tiled.

COMMUNICATIONS TECHNICIAN

Installation, operation, inspection, maintenance, repair and service of radio, television, recording, voice, sound and vision production and reproduction, telephone and telephone interconnect, facsimile, equipment and appliances used for domestic, commercial, educational and entertainment purposes, pulling of wire through conduit but not the installation of conduit.

MARBLE FINISHER

Loading and unloading trucks, distribution of all materials (all stone, sand, etc.), stocking of floors with material, performing all rigging for heavy work, the handling of all material that may be needed for the installation of such materials, building of scaffolding, polishing if needed, patching, waxing of material if damaged, pointing up, caulking, grouting and cleaning of marble, holding water on diamond or Carborundum blade or saw for setters cutting, use of tub saw or any other saw needed for preparation of material, drilling of holes for wires that anchor material set by setters, mixing up of molding plaster for installation of material, mixing up thin set for the installation of material, mixing up of sand to cement for the installation of material and such other work as may be required in helping a Marble Setter in the handling of all material in the erection or installation of

interior marble, slate, travertine, art marble, serpentine, alberene stone, blue stone, granite and other stones (meaning as to stone any foreign or domestic materials as are specified and used in building interiors and exteriors and customarily known as stone in the trade), carrara, sanionyx, vitrolite and similar opaque glass and the laying of all marble tile, terrazzo tile, slate tile and precast tile, steps, risers treads, base, or any other materials that may be used as substitutes for any of the aforementioned materials and which are used on interior and exterior which are installed in a similar manner.

MATERIAL TESTER I: Hand coring and drilling for testing of materials; field inspection of uncured concrete and asphalt.

MATERIAL TESTER II: Field inspection of welds, structural steel, fireproofing, masonry, soil, facade, reinforcing steel, formwork, cured concrete, and concrete and asphalt batch plants; adjusting proportions of bituminous mixtures.

OPERATING ENGINEER - BUILDING

Class 1. Asphalt Plant; Asphalt Spreader; Autograde; Backhoes with Caisson Attachment; Batch Plant; Benoto (requires Two Engineers); Boiler and Throttle Valve; Caisson Rigs; Central Redi-Mix Plant; Combination Back Hoe Front End-loader Machine; Compressor and Throttle Valve; Concrete Breaker (Truck Mounted); Concrete Conveyor; Concrete Conveyor (Truck Mounted); Concrete Paver Over 27E cu. ft; Concrete Paver 27E cu. ft. and Under: Concrete Placer; Concrete Placing Boom; Concrete Pump (Truck Mounted); Concrete Tower; Cranes, All; Cranes, Hammerhead; Cranes, (GCI and similar Type); Creter Crane; Spider Crane; Crusher, Stone, etc.; Derricks, All; Derricks, Traveling; Formless Curb and Gutter Machine; Grader, Elevating; Grouting Machines; Heavy Duty Self-Propelled Transporter or Prime Mover; Highlift Shovels or Front Endloader 2-1/4 yd. and over; Hoists, Elevators, outside type rack and pinion and similar machines; Hoists, One, Two and Three Drum; Hoists, Two Tugger One Floor; Hydraulic Backhoes; Hydraulic Boom Trucks; Hydro Vac (and similar equipment); Locomotives, All; Motor Patrol; Lubrication Technician; Manipulators; Pile Drivers and Skid Rig; Post Hole Digger; Pre-Stress Machine; Pump Cretes Dual Ram; Pump Cretes: Squeeze Cretes-Screw Type Pumps; Gypsum Bulker and Pump; Raised and Blind Hole Drill; Roto Mill Grinder; Scoops - Tractor Drawn; Slip-Form Paver; Straddle Buggies; Operation of Tie Back Machine; Tournapull; Tractor with Boom and Side Boom; Trenching Machines.

Class 2. Boilers; Broom, All Power Propelled; Bulldozers; Concrete Mixer (Two Bag and Over); Conveyor, Portable; Forklift Trucks; Highlift Shovels or Front Endloaders under 2-1/4 yd.; Hoists, Automatic; Hoists, Inside Elevators; Hoists, Sewer Dragging Machine; Hoists, Tugger Single Drum; Laser Screed; Rock Drill (Self-Propelled); Rock Drill (Truck Mounted); Rollers, All; Steam Generators; Tractors, All; Tractor Drawn Vibratory Roller; Winch Trucks with "A" Frame.

Class 3. Air Compressor; Combination Small Equipment Operator; Generators; Heaters, Mechanical; Hoists, Inside Elevators (remodeling or renovation work); Hydraulic Power Units (Pile Driving, Extracting, and Drilling); Pumps, over 3" (1 to 3 not to exceed a total of 300 ft.); Low Boys; Pumps, Well Points; Welding Machines (2 through 5); Winches, 4 Small Electric Drill Winches.

Class 4. Bobcats and/or other Skid Steer Loaders; Oilers; and Brick Forklift.

Class 5. Assistant Craft Foreman.

Class 6. Gradall.

Class 7. Mechanics; Welders.

Will County Prevailing Wage Rates posted on 7/15/2026

OPERATING ENGINEERS - HIGHWAY CONSTRUCTION

Class 1. Asphalt Plant; Asphalt Heater and Planer Combination; Asphalt Heater Scarfire; Asphalt Spreader; Autograder/GOMACO or other similar type machines: ABG Paver; Backhoes with Caisson Attachment; Ballast Regulator; Belt Loader; Caisson Rigs; Car Dumper; Central Redi-Mix Plant; Combination Backhoe Front Endloader Machine, (1 cu. yd. Backhoe Bucket or over or with attachments); Concrete Breaker (Truck Mounted); Concrete Conveyor; Concrete Paver over 27E cu. ft.; Concrete Placer; Concrete Tube Float; Cranes, all attachments; Cranes, Tower Cranes of all types: Creter Crane: Spider Crane; Crusher, Stone, etc.; Derricks, All; Derrick Boats; Derricks, Traveling; Dredges; Elevators, Outside type Rack & Pinion and Similar Machines; Formless Curb and Gutter Machine; Grader, Elevating; Grader, Motor Grader, Motor Patrol, Auto Patrol, Form Grader, Pull Grader, Subgrader; Guard Rail Post Driver Truck Mounted; Hoists, One, Two and Three Drum; Heavy Duty Self-Propelled Transporter or Prime Mover; Hydraulic Backhoes; Backhoes with shear attachments up to 40' of boom reach; Lubrication Technician; Manipulators; Mucking Machine; Pile Drivers and Skid Rig; Pre-Stress Machine; Pump Cretes Dual Ram; Rock Drill - Crawler or Skid Rig; Rock Drill - Truck Mounted; Rock/Track Tamper; Roto Mill Grinder; Slip-Form Paver; Snow Melters; Soil Test Drill Rig (Truck Mounted); Straddle Buggies; Hydraulic Telescoping Form (Tunnel); Operation of Tieback Machine; Tractor Drawn Belt Loader; Tractor Drawn Belt Loader (with attached pusher - two engineers); Tractor with Boom; Tractaire with Attachments; Traffic Barrier Transfer Machine; Trenching; Truck Mounted Concrete Pump with Boom; Raised or Blind Hole Drills (Tunnel Shaft); Underground Boring and/or Mining Machines 5 ft. in diameter and over tunnel, etc; Underground Boring and/or Mining Machines under 5 ft. in diameter; Wheel Excavator; Widener (APSCO).

Class 2. Batch Plant; Bituminous Mixer; Boiler and Throttle Valve; Bulldozers; Car Loader Trailing Conveyors; Combination Backhoe Front Endloader Machine (Less than 1 cu. yd. Backhoe Bucket or over or with attachments); Compressor and Throttle Valve; Compressor, Common Receiver (3); Concrete Breaker or Hydro Hammer; Concrete Grinding Machine; Concrete Mixer or Paver 7S Series to and including 27 cu. ft.; Concrete Spreader; Concrete Curing Machine, Burlap Machine, Belting Machine and Sealing Machine; Concrete Wheel Saw; Conveyor Muck Cars (Haglund or Similar Type); Drills, All; Finishing Machine - Concrete; Highlift Shovels or Front Endloader; Hoist - Sewer Dragging Machine; Hydraulic Boom Trucks (All Attachments); Hydro-Blaster; Hydro Excavating (excluding hose work); Laser Screed; All Locomotives, Dinky; Off-Road Hauling Units (including articulating) Non Self-Loading Ejection Dump; Pump Cretes: Squeeze Cretes - Screw Type Pumps, Gypsum Bulker and Pump; Roller, Asphalt; Rotary Snow Plows; Rototiller, Seaman, etc., self-propelled; Self-Propelled Compactor; Spreader - Chip - Stone, etc.; Scraper - Single/Twin Engine/Push and Pull; Scraper - Prime Mover in Tandem (Regardless of Size); Tractors pulling attachments, Sheeps Foot, Disc, Compactor, etc.; Tug Boats.

Class 3. Boilers; Brooms, All Power Propelled; Cement Supply Tender; Compressor, Common Receiver (2); Concrete Mixer (Two Bag and Over); Conveyor, Portable; Farm-Type Tractors Used for Mowing, Seeding, etc.; Forklift Trucks; Grouting Machine; Hoists, Automatic; Hoists, All Elevators; Hoists, Tugger Single Drum; Jeep Diggers; Low Boys; Pipe Jacking Machines; Post-Hole Digger; Power Saw, Concrete Power Driven; Pug Mills; Rollers, other than Asphalt; Seed and Straw Blower; Steam Generators; Stump Machine; Winch Trucks with "A" Frame; Work Boats; Tamper-Form-Motor Driven.

Class 4. Air Compressor; Combination - Small Equipment Operator; Directional Boring Machine; Generators; Heaters, Mechanical; Hydraulic Power Unit (Pile Driving, Extracting, or Drilling); Light Plants, All (1 through 5); Pumps, over 3" (1 to 3 not to exceed a total of 300 ft.); Pumps, Well Points; Vacuum Trucks (excluding hose work); Welding Machines (2 through 5); Winches, 4 Small

Electric Drill Winches.

Class 5. SkidSteer Loader (all); Brick Forklifts; Oilers.

Class 6. Field Mechanics and Field Welders

Class 7. Dowell Machine with Air Compressor; Gradall and machines of like nature.

OPERATING ENGINEER - FLOATING

Class 1. Craft Foreman; Master Mechanic; Diver/Wet Tender; Engineer; Engineer (Hydraulic Dredge).

Class 2. Crane/Backhoe Operator; Boat Operator with towing endorsement; Mechanic/Welder; Assistant Engineer (Hydraulic Dredge); Leverman (Hydraulic Dredge); Diver Tender.

Class 3. Deck Equipment Operator, Machineryman, Maintenance of Crane (over 50 ton capacity) or Backhoe (115,000 lbs. or more); Tug/Launch Operator; Loader/Dozer and like equipment on Barge, Breakwater Wall, Slip/Dock, or Scow, Deck Machinery, etc.

Class 4. Deck Equipment Operator, Machineryman/Fireman (4 Equipment Units or More); Off Road Trucks; Deck Hand, Tug Engineer, Crane Maintenance (50 Ton Capacity and Under) or Backhoe Weighing (115,000 pounds or less); Assistant Tug Operator.

Class 5. Friction or Lattice Boom Cranes.

Class 6. ROV Pilot, ROV Tender

SURVEY WORKER

Operates survey equipment (such as levels, transits, data collectors, GPS and robotic total stations) for the purpose of performing construction layout and/or grade checking.

SURVEY FOREMAN

Operates survey equipment (such as levels, transits, data collectors, GPS and robotic total stations) for the purpose of performing construction layout and/or grade checking; oversees survey crew operations; and/or coordinates work of survey crews.

TRAFFIC SAFETY Worker I

Traffic Safety Worker I - work associated with the delivery, installation, pick-up and servicing of safety devices during periods of roadway construction, including such work as set-up and maintenance of barricades, barrier wall reflectors, drums, cones, delineators, signs, crash attenuators, glare screen and other such items, and the layout and application or removal of conflicting and/or temporary roadway markings utilized to control traffic in construction zones, as well as flagging for these operations.

Will County Prevailing Wage Rates posted on 7/15/2026

TRAFFIC SAFETY WORKER II

Work associated with the installation and removal of permanent pavement markings and/or pavement markers including both installations performed by hand and installations performed by truck.

TRUCK DRIVER - BUILDING, HEAVY AND HIGHWAY CONSTRUCTION

Class 1. Two or three Axle Trucks. A-frame Truck when used for transportation purposes; Air Compressors and Welding Machines, including those pulled by cars, pick-up trucks and tractors; Ambulances; Batch Gate Lockers; Batch Hopperman; Car and Truck Washers; Carry-alls; Fork Lifts and Hoisters; Helpers; Mechanics Helpers and Greasers; Oil Distributors 2-man operation; Pavement Breakers; Pole Trailer, up to 40 feet; Power Mower Tractors; Self-propelled Chip Spreader; Skipman; Slurry Trucks, 2-man operation; Slurry Truck Conveyor Operation, 2 or 3 man; Teamsters; Unskilled Dumpman; and Truck Drivers hauling warning lights, barricades, and portable toilets on the job site.

Class 2. Four axle trucks; Dump Crets and Adgetors under 7 yards; Dumpsters, Track Trucks, Euclids, Hug Bottom Dump Turnapulls or Turnatrailers when pulling other than self-loading equipment or similar equipment under 16 cubic yards; Mixer Trucks under 7 yeards; Ready-mix Plant Hopper Operator, and Winch Trucks, 2 Axles.

Class 3. Five axle trucks; Dump Crets and Adgetors 7 yards and over; Dumpsters, Track Trucks, Euclids, Hug Bottom Dump Turnatrailers or turnapulls when pulling other than self-loading equipment or similar equipment over 16 cubic yards; Explosives and/or Fission Material Trucks; Mixer Trucks 7 yards or over; Mobile Cranes while in transit; Oil Distributors, 1-man operation; Pole Trailer, over 40 feet; Pole and Expandable Trailers hauling material over 50 feet long; Slurry trucks, 1-man operation; Winch trucks, 3 axles or more; Mechanic--Truck Welder and Truck Painter.

Class 4. Six axle trucks; Dual-purpose vehicles, such as mounted crane trucks with hoist and accessories; Foreman; Master Mechanic; Self-loading equipment like P.B. and trucks with scoops on the front.

TERRAZZO FINISHER

The handling of sand, cement, marble chips, and all other materials that may be used by the Mosaic Terrazzo Mechanic, and the mixing, grinding, grouting, cleaning and sealing of all Marble, Mosaic, and Terrazzo work, floors, base, stairs, and wainscoting by hand or machine, and in addition, assisting and aiding Marble, Masonic, and Terrazzo Mechanics.

Other Classifications of Work:

For definitions of classifications not otherwise set out, the Department generally has on file such definitions which are available. If a task to be performed is not subject to one of the classifications of pay set out, the Department will upon being contacted state which neighboring county has such a classification and provide such rate, such rate being deemed to exist by reference in this document. If no neighboring county rate applies to the task, the Department shall undertake a special determination, such special determination being then deemed to have existed under this determination. If a project requires these, or any classification not listed, please contact IDOL at 217-782-1710 for wage rates or clarifications.

LANDSCAPING

Landscaping work falls under the existing classifications for laborer, operating engineer and truck driver. The work performed by landscape plantsman and landscape laborer is covered by the existing classification of laborer. The work performed by landscape operators (regardless of equipment used or its size) is covered by the classifications of operating engineer. The work performed by landscape truck drivers (regardless of size of truck driven) is covered by the classifications of truck driver.

MATERIAL TESTER & MATERIAL TESTER/INSPECTOR I AND II

Notwithstanding the difference in the classification title, the classification entitled "Material Tester I" involves the same job duties as the classification entitled "Material Tester/Inspector I". Likewise, the classification entitled "Material Tester II" involves the same job duties as the classification entitled "Material Tester/Inspector II".